Ma Pergola Solaire

BIK-E 400 & ROOM-E 400

PRODUCTION D'ENERGIE ET PROTECTION SOLAIRE POUR MODULES PHOTOVOLTAÏQUES

ENERGY PRODUCTION AND SUN PROTECTION FOR PHOTOVOLTAIC MODULES

Notice de montage / Installation instructions

Sommaire / Summary

BIK-E 400 & ROOM-E 400

Nomenclatures

Outils / accessoires nécessaires au montage /
Tools / accessories required for installation

1. Montage de la structure
   Mounting the structure

   A. Informations / **More information**
   B. Fixation du premier longeron transversal sur le mur
   Fixing the first crossbar to the wall
   C. Fixation des pieds / **Fixing feet**
   D. Montage des longerons latéraux / **Mounting the side beams**
   E. Montage du deuxième longeron transversal /
   Mounting the second cross-beam

2. Montage de la toiture / **Assembly of the roof**

   A. Préparation et assemblage des grandes traverses /
   Preparing and assembling large crossbars
   B. Montage des modules photovoltaïques /
   Mounting of photovoltaic modules
   C. Montage des capots / **Fitting the covers**

3. Partie électrique / **Electrical part**

4. Montage des sous-faces / **Fitting ceilings**

5. Montage de l'option Renfort Bik-E / **Fitting the Bik-E reinforcement option**

Information and images are non-contactual. We reserve the right to make to make technical changes without notice.

This document is the property of MPS. It shall not be reproduced or shared with third parties without MPS agreement

INSTRUCTIONS DE SECURITE / SAFETY INSTRUCTIONS

La conception, le montage et la mise en service de la pergola/carport et de son système photovoltaïque ne doivent être effectués que par du personnel dûment qualifié et habilité. Une exécution inadéquate peut causer des dommages à l'installation et mettre des vies en danger.
La bonne qualification de l'installateur est exigée pour l'application des aides éventuelles (prime et tarif d'achat). Renseignez-vous localement.
Les normes électriques et de constructions nationales et locales, les règlements divers ainsi que les directives concernant la protection de l'environnement en vigueur doivent impérativement être respectés.
Avant le montage, il incombe à l'installateur de vérifier la capacité d'ancrage du sol et du mur attenant le cas échéant. MPS ne pourra être tenue pour responsable du non-respect des consignes concernant les ancrages et des conséquences qui en découleraient.
Avant le montage, vérifiez que vous êtes en possession de la version à jour des instructions de montage sur notre site internet : http://mapergolasolaire.com/supports/. Tout au long du montage, assurez-vous qu'au moins un exemplaire des instructions de montage soit disponible sur le chantier.
Veuillez prendre en compte les instructions de montage du fabricant des modules photovoltaïques et vérifier que ces derniers sont en adéquation avec les surcharges climatiques du lieu d'implantation. Ces vérifications incombent à l'installateur.
Les pergolas / carports MPS ne peuvent être installés qu'à plus de 3 km du bord de mer (bord de mer non admis).
Les pergolas/carports MPS ne peuvent être installés qu'en respectant les domaines d'emploi précisé à la page suivante.
Procédez au démontage du système en suivant les étapes de montage dans le sens inverse.

Afin d'optimiser la production photovoltaïque, il est recommandé de nettoyer les modules PV et notamment le bas du Shed, ainsi que les endroits permettant l'évacuation des eaux pluviales. La fréquence de nettoyage est tributaire de son environnement.

The design, assembly and commissioning of the pergola/carport and its photovoltaic system must only be carried out by suitably qualified and authorised personnel. Improper installation can cause damage to the system and put lives at risk.The installer must be suitably qualified in order to qualify for any subsidies (premium and feed-in tariff). Find out more locally.It is essential to comply with national and local electrical and building standards, regulations and environmental protection directives. Before installation, it is the responsibility of the installer to check the anchorage capacity of the ground and any adjacent walls. MPS cannot be held responsible for failure to comply with the anchoring instructions and the consequences thereof. Before installation, check that you have the latest version of the installation instructions on our website: http://mapergolasolaire.com/supports/.
During installation, ensure that at least one copy of the installation instructions is available on site. Please note the installation instructions from the photovoltaic module manufacturer and check that the modules are suitable for the climatic overloads at the installation site. These checks are the responsibility of the installer.MPS pergolas/carports may only be installed more than 3 km from the seaside (seaside not permitted).
MPS pergolas/carports may only be installed in accordance with the rules specified on the following page.
Dismantle the system by following the assembly steps in reverse order.

To optimise photovoltaic production, it is advisable to clean the PV modules, particularly the bottom of the shed, as well as areas where rainwater can drain away. The frequency of cleaning depends on the environment.

Information and images are non-contactual. We reserve the right to make to make technical changes without notice.

This document is the property of MPS. It shall not be reproduced or shared with third parties without MPS agreement

domaines d'emploi / **fields of use**

Résumé des chargements climatiques admissibles et du poids des lests P_{lest} au droit de chaque pieds de poteau :

Summary of permissible climatic loads and the weight of P_{lest} ballast at each column foot:

Vent / **Wind**		Neige / **Snow**			
Land category	**Wind region**	**French snow area**	Altitude (m)	**Snow normal max (kg/m²)**	**Accidental snowfall max (kg/m²)**
Cat 0	V4	A1 / A2	200	36	80
		B1 / B2	-		
		C1 / C2	-		
		D	-		
		E	-		
Cat II	V4	A1 / A2	550	68	108
		B1 / B2	500		
		C1 / C2	400		
		D	-		
		E	-		
Cat IIIa	V4	A1 / A2	660	80	144
		B1 / B2	600		
		C1 / C2	530		
		D	300		
		E	-		
Cat IIIb	V4	A1 / A2	740	89	144
		B1 / B2	670		
		C1 / C2	600		
		D	410		
		E	-		
Cat IV	V4	A1 / A2	800	96	144
		B1 / B2	730		
		C1 / C2	660		
		D	500		
		E	-		

P_{lest} (kg)	0	II	IIIa	IIIb	IV
Guyane	260 kg	125 kg	25 kg		
1	425 kg	245 kg	115 kg		
2	550 kg	335 kg	170 kg	45 kg	
3	670 kg	425 kg	235 kg	80 kg	
4	805 kg	535 kg	305 kg	125 kg	
Martinique			570 kg	305 kg	90 kg
Réunion			670 kg	370 kg	125 kg
Guadeloupe			780 kg	435 kg	170 kg

	Zone non admissible	Inadmissible zone
	Structure autostable	Free-standing structure

Information et visuels non contractuels. Sous réserve de modifications techniques sans préavis.

This document is the property of MPS. It shall not be reproduced or shared with third parties without MPS agreement

Nomenclature BIK-E 400

1 kit : CLASS23-E-400

N° Article	Quantité	Désignation	Référence
1	2	CLA LONGERON FRONTAL X3 / FRONT BEAM X3	PRT0P01365AAa
2	2	CLA DEFLECTEUR LONGERON X3 / BEAM DEFLECTOR X3	PRT0P01373AAa
3	1	CLA CANIVEAU GAUCHE Y2 / LEFT GUTTER Y2	PRT0P01350AAa
4	1	CLA CANIVEAU DROIT Y2 / RIGHT GUTTER Y2	PRT0P01347AAa
5	2	CLA HAUT CANIVEAU Y2 / HIGH GUTTER Y2	PRT0P01374AAa
6	1	CLA LIAISON ARRIERE X3/ SHA REAR LINK X3	PRT0P01371AAa
7	4	CLA JOINT LONGERON / SHA BEAM SEAL	PRT0P01074AAc
8	2	CLA PLATINE JONCTION ANGLE G / CORNER JUNCTION PLATE G	PRT0P00975AAc
9	2	CLA PLATINE JONCTION ANGLE D / CORNER JUNCTION PLATE D	PRT0P00974AAc
10	4	CLA PLATINE FIXATION / JUNCTION PLATE	PRT0P01075AAb
11	2	SHA FERMETURE SUPPORT AVANT / FRONT SUPPORT CLOSURE 2.0	PRT0P00972AAa
12	4	SHA FERMETURE LONGERON / BEAM CLOSURE 2.0	PRT0P00970AAa
13	2	SHA FERMETURE LAISON ARRIERE / REAR LAISON CLOSURE 2.0	PRT0P00971AAa
14	1	KIT VISSERIE STRUCTURE CLASSIC	CLASTSS2A
15	2	CLA PLATINE FIXATION TRAVERSE CENTRALE	PRT0P01377AAa
16	1	CLA TRAVERSE CENTRAL Y2 / CENTRAL GUTTER Y2	PRT0P01378AAa
17	24	VITASEAL 600 20/5-10 5,6M LONG 100MM	PDC0P00533AA
18	24	SHA CALAGE SOUS FACE / HONEYCOMB WEDGE	PDCP0P00732AA
19	48	VIS AUTOPERCEUSE 4,8*19	V035V02

1 kit : CLASTSS2A

N° Article	Quantité	Désignation	Référence
1	20	CLA ECROU M8	PRT0P01382AAa
2	8	Rivet 4 x 16	V042V02N
3	16	Vis autoperceuse H 4.2X19	V138V02
4	20	Vis autoperceuse H 4,8x19	V110V02
5	20	Vis TBHc M8x16	V145V02
6	16	Vis CHc M8x60	V180V02
7	32	Vis Autoperceuse TF torx 4,8x19	V147V02
8	8	Vis STHc M8x25	V106V02
9	16	Vis CHc M8x45 fully threaded	V104V02
10	16	Bouchon fixation pied NOIR (Essentra ref 494386)	V108V02N
11	16	Bouchon fixation pied BLANC (Essentra ref 12805)	V108V02B
12	1	CLA OUTILLAGE PERCAGE CANIVEAU	OUT0P01393AAa
13	2	Passe paroi male 1" pas gaz / Male cross wall 1" pas gaz	PDC0P00739
14	2	Manchon PVC F/F D32 / PVC sleeve F/F D32	PDC0P00741
15	2	Douille cannelée PVC D32 / PVC lamp socket D32	PDC0P00742
16	8	Vis TFHC M5x20	V101V02

1 kit : LPV13-400

N° Article	Quantité	Désignation	Référence
1	2	COMPRIBAND TRS 15/1-3M longueur 1400 mm	PDC0P00533A
2	9	SHA FIXATION MODULE ARRIERE/ SHA FIXING BACK MODULE	ASM0P00880AA
3	2	CLA GOUTIERE INTER-MODULES / SHA GUTTER BETWEEN MODULE with Vitaseal 170mm	PRT0P01383AA
4	1	CLA HABILLAGE DROIT 2.0/ SHA TRIM RIGHT	PRT0P01355AA
5	1	CLA HABILLAGE GAUCHE 2.0 / SHA TRIM LEFT	PRT0P01356AA
6	1	CLA ASM PREMONTAGE SUPPORT X3 / SHA ASM PREMOUNT SUPPORT X3	ASM0P01394AA
7	1	PG PV SCREW SET	PGPVSS1C

/ SELF-DRILLING SCREW 4.8*19

Information and images are non-contactual. We reserve the right to make to make technical changes without notice.

This document is the property of MPS. Information cannot be reproduced or shared with third parties without MPS agreement

I) Structure kit nomenclature ROOM-E 400

1 kit : CLASS22-E-400

N° Article	Quantité	Désignation	Référence
1	2	CLA LONGERON FRONTAL X2 / FRONT BEAM X2	PRT0P01364AAa
2	2	CLA DEFLECTEUR LONGERON X2 / BEAM DEFLECTOR X2	PRT0P01372AAa
3	1	CLA CANIVEAU GAUCHE Y2 / LEFT GUTTER Y2	PRT0P01350AAa
4	1	CLA CANIVEAU DROIT Y2 / RIGHT GUTTER Y2	PRT0P01347AAa
5	2	CLA HAUT CANIVEAU Y2 / HIGH GUTTER Y2	PRT0P01374AAa
6	1	CLA LIAISON ARRIERE X2/ SHA REAR LINK X2	PRT0P01370AAa
7	4	CLA JOINT LONGERON / SHA BEAM SEAL	PRT0P01074AAc
8	2	CLA PLATINE JONCTION ANGLE G / CORNER JUNCTION PLATE G	PRT0P00975AAc
9	2	CLA PLATINE JONCTION ANGLE D / CORNER JUNCTION PLATE D	PRT0P00974AAc
10	4	CLA PLATINE FIXATION / JUNCTION PLATE	PRT0P01075AAb
11	2	SHA FERMETURE SUPPORT AVANT / FRONT SUPPORT CLOSURE 2.0	PRT0P00972AAa
12	4	SHA FERMETURE LONGERON / BEAM CLOSURE 2.0	PRT0P00970AAa
13	2	SHA FERMETURE LAISON ARRIERE / REAR LAISON CLOSURE 2.0	PRT0P00971AAa
14	1	KIT VISSERIE STRUCTURE CLASSIC /Screw set structure CLASSIC	CLASTSS2A
16	12	VITASEAL 600 20/5-10 5,6M LONG 100MM	PDC0P00533AA
17	12	SHA CALAGE SOUS FACE / HONEYCOMB WEDGE	PDCP0P00732AA
18	24	VIS AUTOPERCEUSE 4,8*19 / SELF-DRILLING SCREW 4.8*19	V035V02

1 kit : CLASTSS2A

N° Article	Quantité	Désignation	Référence
1	20	CLA ECROU M8	PRT0P01382AAa
2	8	Rivet 4 x 16	V042V02N
3	16	Vis autoperceuse H 4.2X19	V138V02
4	20	Vis autoperceuse H 4,8x19	V110V02
5	20	Vis TBHc M8x16	V145V02
6	16	Vis CHc M8x60	V180V02
7	32	Vis Autoperceuse TF torx 4,8x19	V147V02
8	8	Vis STHc M8x25	V106V02
9	16	Vis CHc M8x45 fully threaded	V104V02
10	16	Bouchon fixation pied NOIR (Essentra ref 494386)	V108V02N
11	16	Bouchon fixation pied BLANC (Essentra ref 12805)	V108V02B
12	1	CLA OUTILLAGE PERCAGE CANIVEAU	OUT0P01393AAa
13	2	Passe paroi male 1" pas gaz / Male cross wall 1" pas gaz	PDC0P00739
14	2	Manchon PVC F/F D32 / PVC sleeve F/F D32	PDC0P00741
15	2	Douille cannelée PVC D32 / PVC lamp socket D32	PDC0P00742
16	8	Vis TFHC M5x20	V101V02

1 kit : LPV12-400

N° Article	Quantité	Désignation	Référence
1	2	COMPRIBAND TRS 15/1-3M longueur 1400 mm	PDC0P00533A
2	6	SHA FIXATION MODULE ARRIERE/ SHA FIXING BACK MODULE	ASM0P00880AA
3	1	CLA GOUTIERE INTER-MODULES / SHA GUTTER BETWEEN MODULE with Vitaseal 170mm	PRT0P01383AA
4	1	CLA HABILLAGE DROIT 2.0/ SHA TRIM RIGHT	PRT0P01355AA
5	1	CLA HABILLAGE GAUCHE 2.0 / SHA TRIM LEFT	PRT0P01356AA
6	1	CLA ASM PREMONTAGE SUPPORT X2 / SHA ASM PREMOUNT SUPPORT X2	ASM0P01395AA
7	1	PG PV SCREW SET	PGPVSS1C

Information and images are non-contactual. We reserve the right to make to make technical changes without notice.

This document is the property of MPS. It shall not be reproduced or shared with third parties without MPS agreement

BIK-E 400 & ROOM-E 400

ROOM-E 400

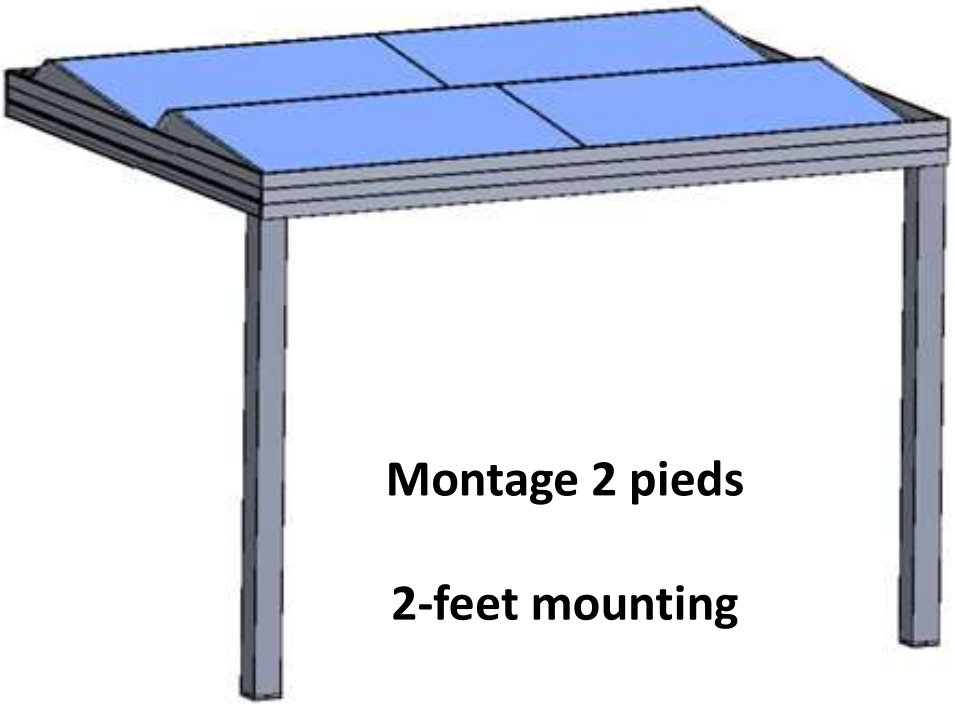

BIK-E 400

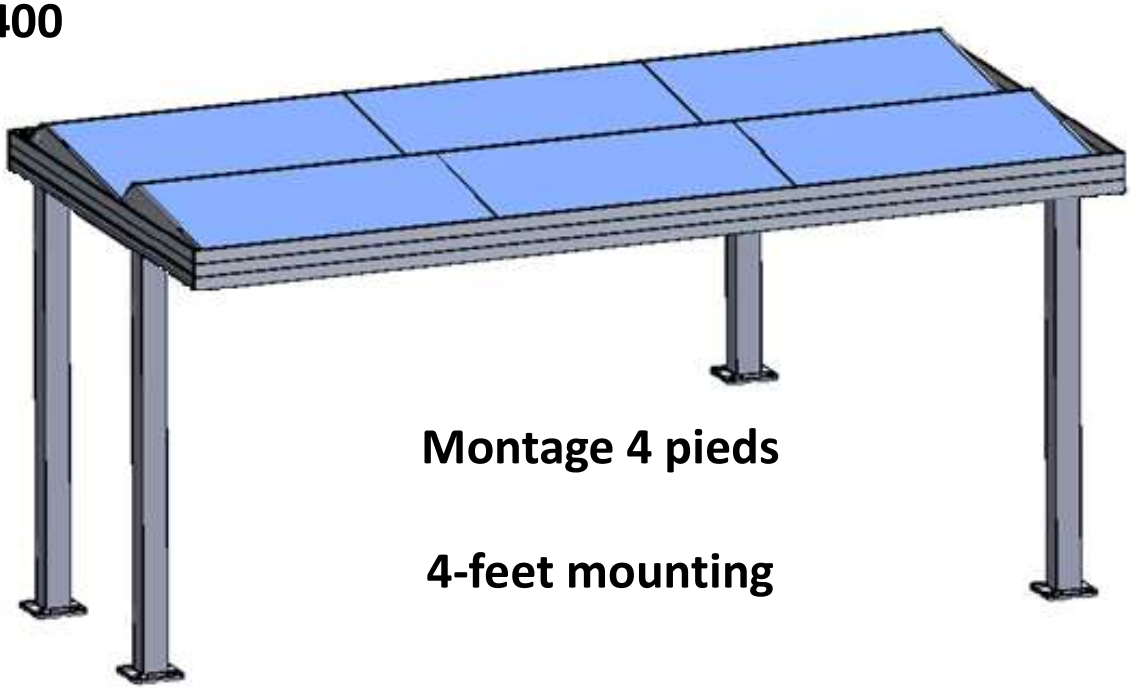

Information and images are non-contactual. We reserve the right to make to make technical changes without notice.

This document is the property of MPS. It shall not be reproduced or shared with third parties without MPS agreement

BIK-E 400 & ROOM-E 400

Outils / Accessoires nécessaires au montage
Tools / Accessories required for installation

Serre-joints x6
Clamps x6

Élévateur portable pouvant s'élever jusqu'à 3m de haut.
Portable lift with a height of up to 3m.

Visseuse
Screwdriver

Embout cruciforme
Cruciform bit

Embouts noix de serrage
End caps clamping nuts

Jeu de clés mâles 6 pans coudés
6-piece Allen key set, angled

Information and images are non-contactual. We reserve the right to make to make technical changes without notice.

This document is the property of MPS. It shall not be reproduced or shared with third parties without MPS agreement

BIK-E 400 & ROOM-E 400

1. Montage de la structure / **Mounting the structure**

A. Informations / **More information**

☐ = **pied/foot 150x150**

Sur les schémas ci-dessous se trouve le recouvrement de la toiture ainsi que l'espacement entre poteaux. CLASS-E 400 montée en façade a des pieds encastrés (qui ne dépassent donc pas des poteaux). Voici les différentes tailles et l'encombrement de chacun :
The diagrams below show the roof covering and the spacing between posts. CLASS-E 400 mounted on the facade has recessed feet (which do not extend beyond the posts).Here are the different sizes and the overall dimensions of each:

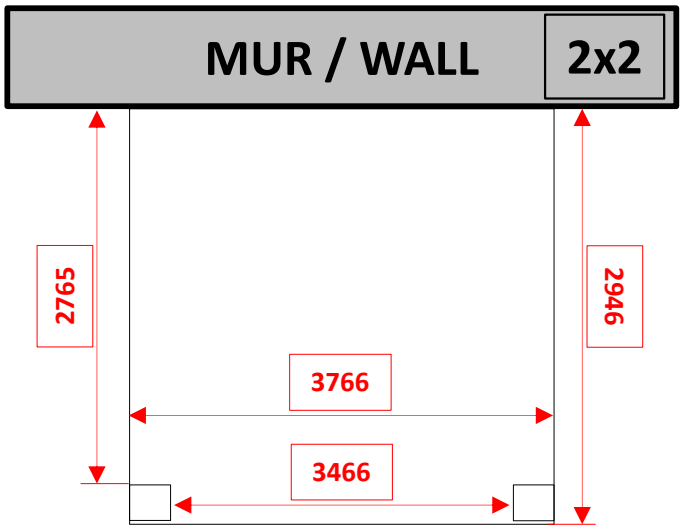

ROOM-E 400

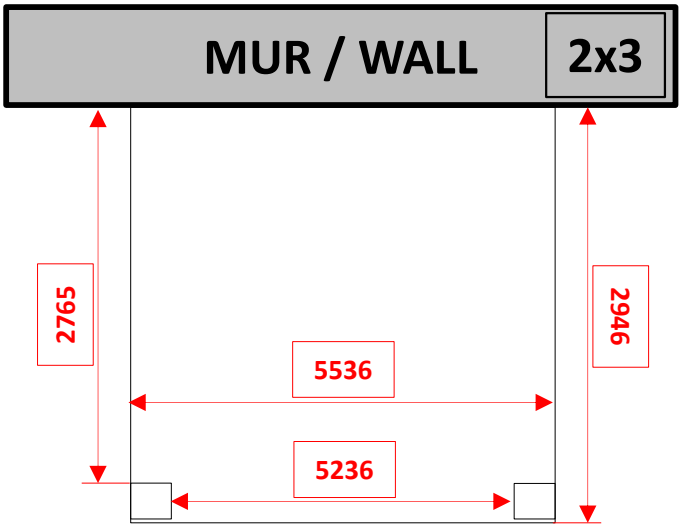

BIK-E 400

Information and images are non-contactual. We reserve the right to make to make technical changes without notice.

This document is the property of MPS. It shall not be reproduced or shared with third parties without MPS agreement

BIK-E 400 & ROOM-E 400 FREE-STANDING (4 pieds / feet)

1. Montage de la structure / **Mounting the structure**

☐ = pied/foot 150x150

A. Informations / **More information**

CLASS-E 400 montée en ilot a des embases de pieds plus larges. Voici les différentes tailles et l'encombrement de chacune :

CLASS-E 400 mounted as an island (free-standing) has wider base plates. Here are the different sizes and their dimensions:

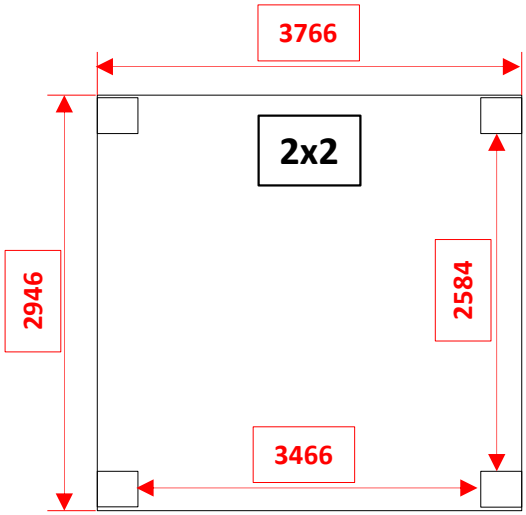

ROOM-E 400

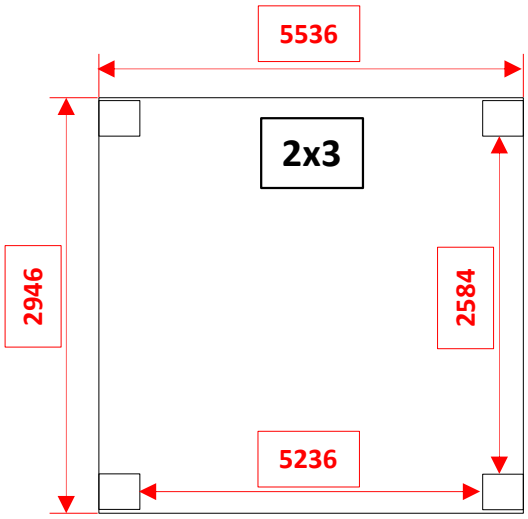

BIK-E 400

Information and images are non-contactual. We reserve the right to make to make technical changes without notice.

This document is the property of MPS. It shall not be reproduced or shared with third parties without MPS agreement

BIK-E 400 & ROOM-E 400

1. Montage de la structure / **Mounting the structure**

A. Informations / **More information**

Vous devez IMPERATIVEMMENT lire l'ensemble de la notice avant de débuter l'installation.
Lire également les règles à respecter pour l'installation d'une pergola/carport CLASS-E 400 en annexes.

You MUST read the entire manual before starting installation.
Also read the rules for installing a BIK-E 400 / ROOM-E 400 in the appendices.

Plage de compatibilité des modules / **Module compatibility range**

	MIN	MAX
X	1090	1160
Y	1690	1770
Z	30	50

(mm)

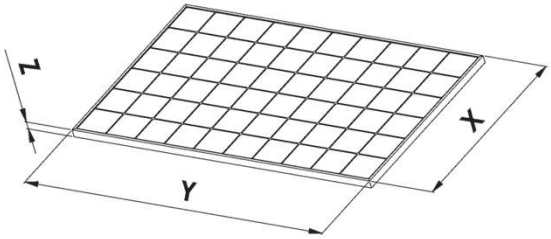

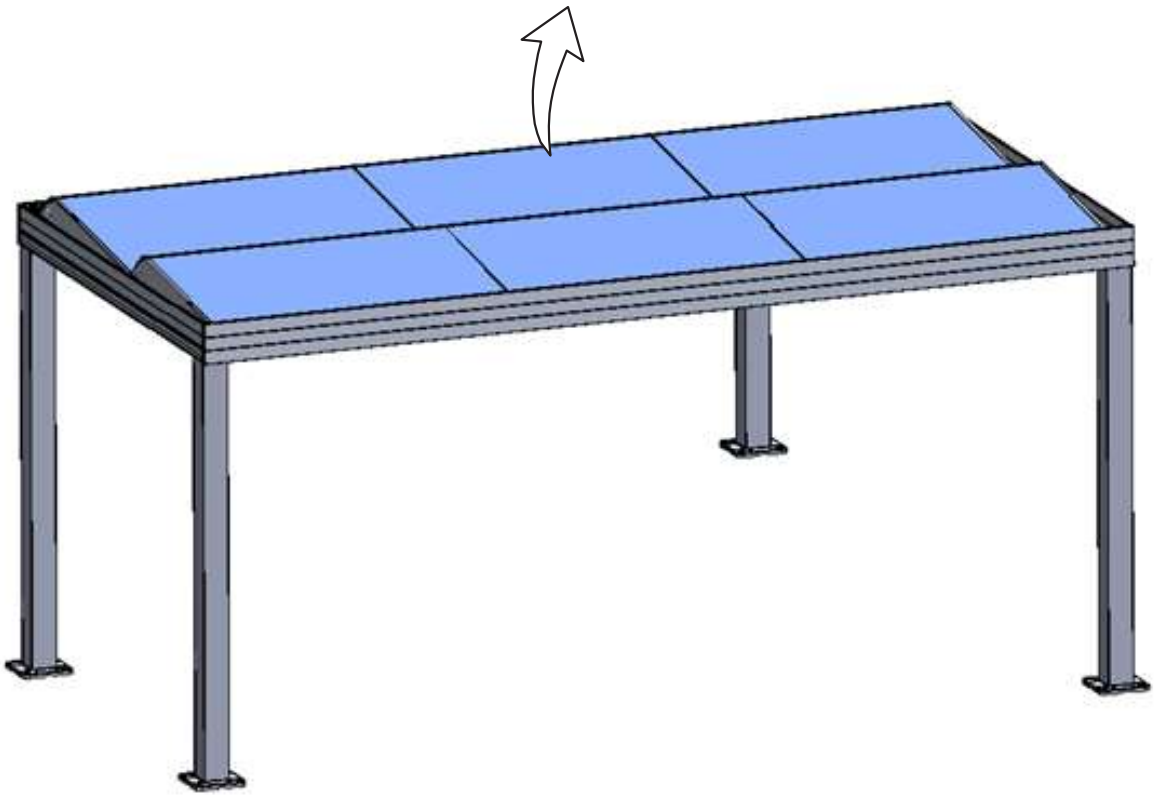

Information and images are non-contactual. We reserve the right to make to make technical changes without notice.

This document is the property of MPS. It shall not be reproduced or shared with third parties without MPS agreement

BIK-E 400 & ROOM-E 400

1. Montage de la structure / **Mounting the structure**

B. Fixation du premier longeron transversal sur le mur / **Fixing the first crossbar to the wall**

Commencez par monter les 2 sous-assemblages / **Start by mounting the 2 sub-assemblies**

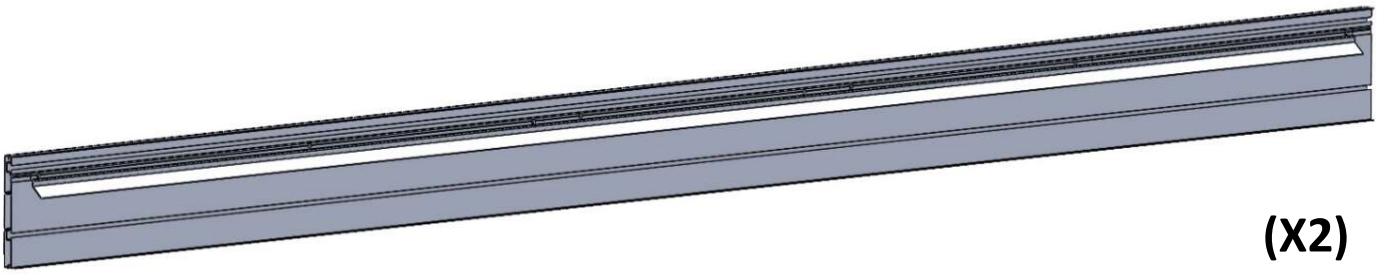

(X2)

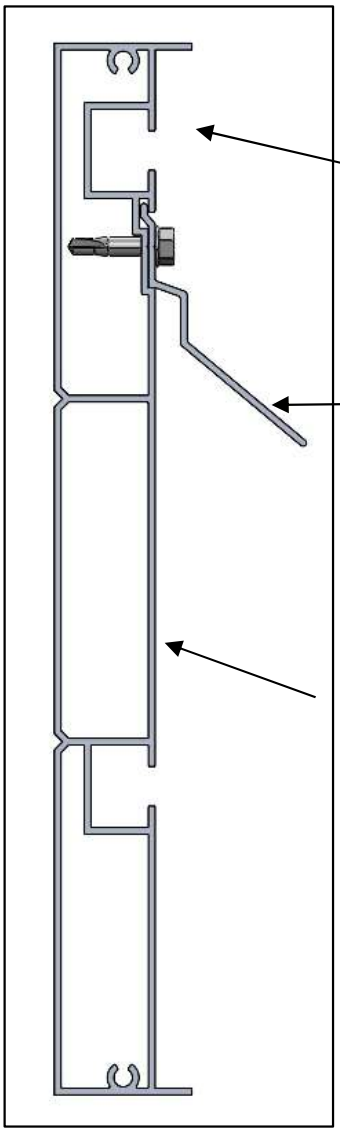

Information and images are non-contactual. We reserve the right to make to make technical changes without notice.

This document is the property of MPS. It shall not be reproduced or shared with third parties without MPS agreement

BIK-E 400 & ROOM-E 400

1. Montage de la structure / **Mounting the structure**

B. Fixation du premier longeron transversal sur le mur / **Fixing the first crossbar to the wall**

Veuillez bien centrer la pièce, il faut que les deux distances de chaque côté soient égales /
Please centre the part properly, so that the two distances on each side are equal.

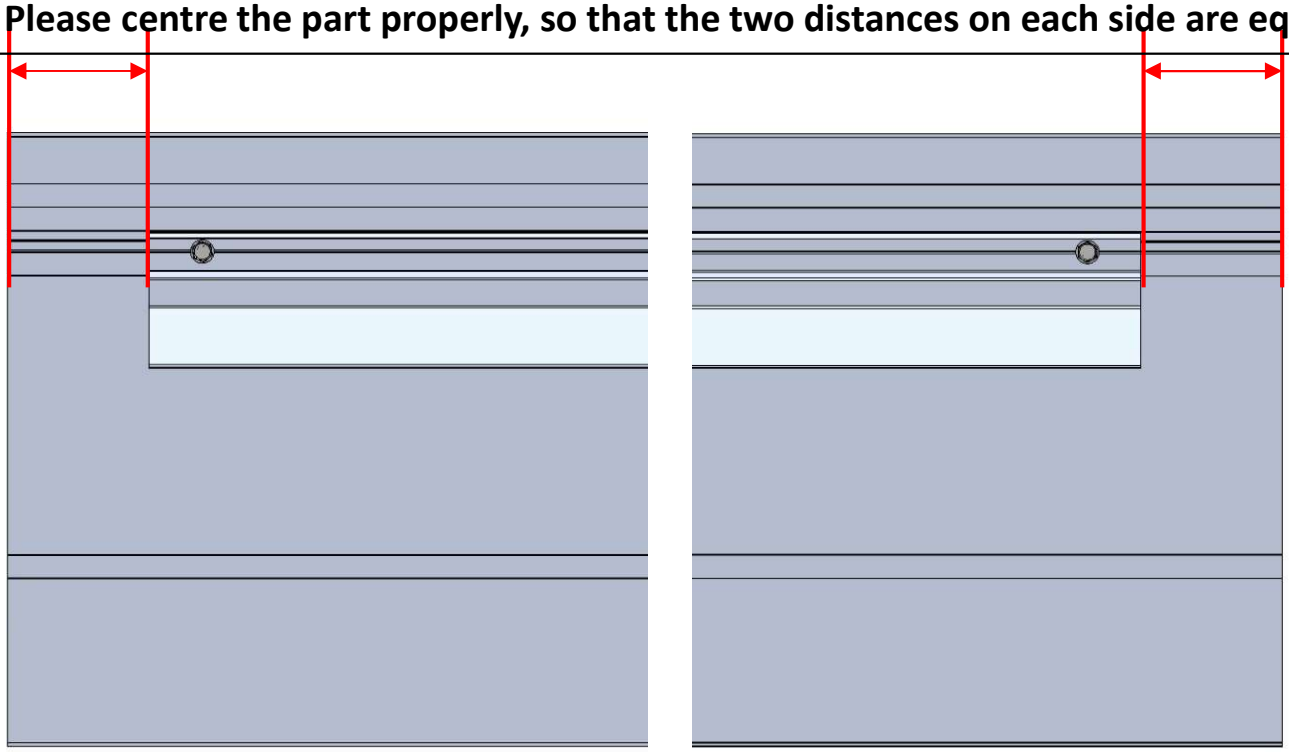

Côté gauche
Left side

Côté droit
Right side

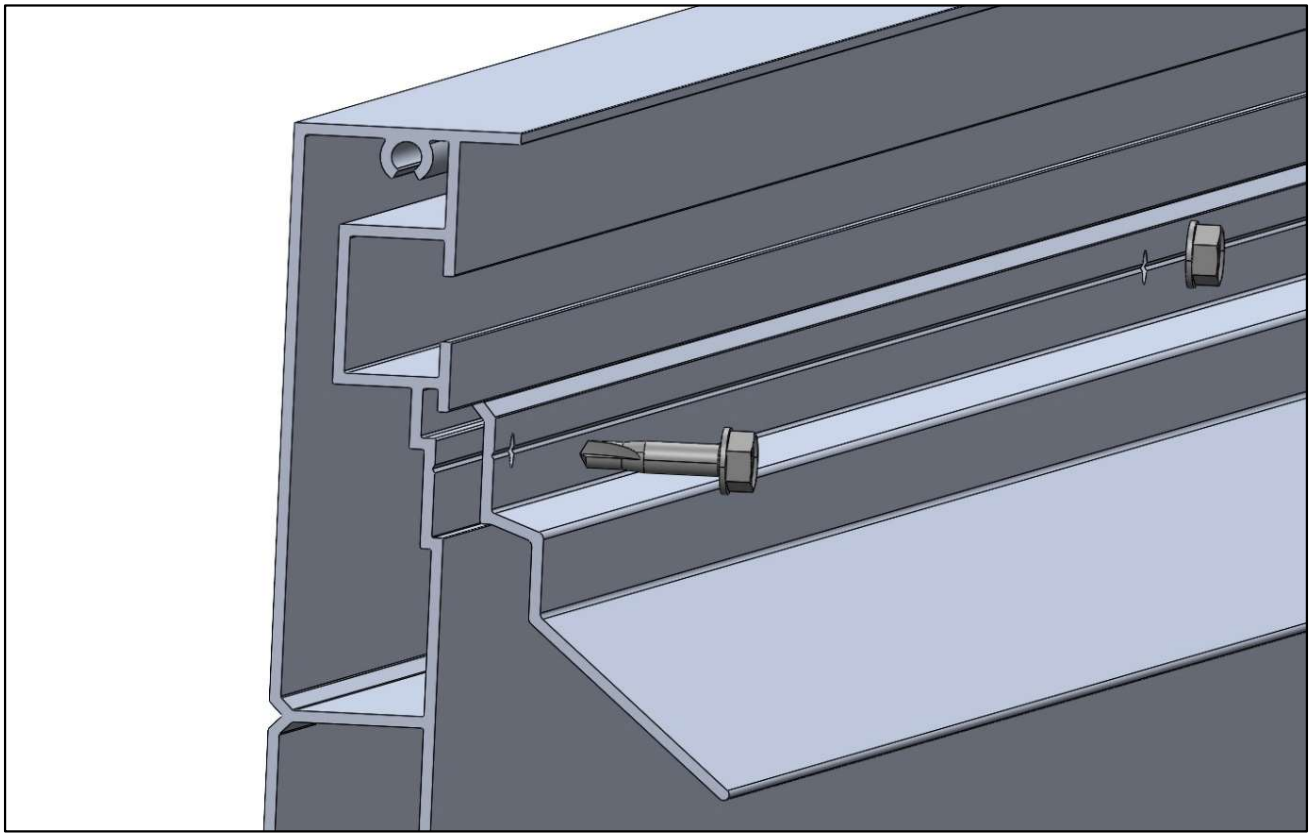

Information and images are non-contactual. We reserve the right to make to make technical changes without notice.

This document is the property of MPS. It shall not be reproduced or shared with third parties without MPS agreement

BIK-E 400 & ROOM-E 400

1. Montage de la structure / **Mounting the structure**

B. Fixation du premier longeron transversal sur le mur / **Fixing the first crossbar to the wall**

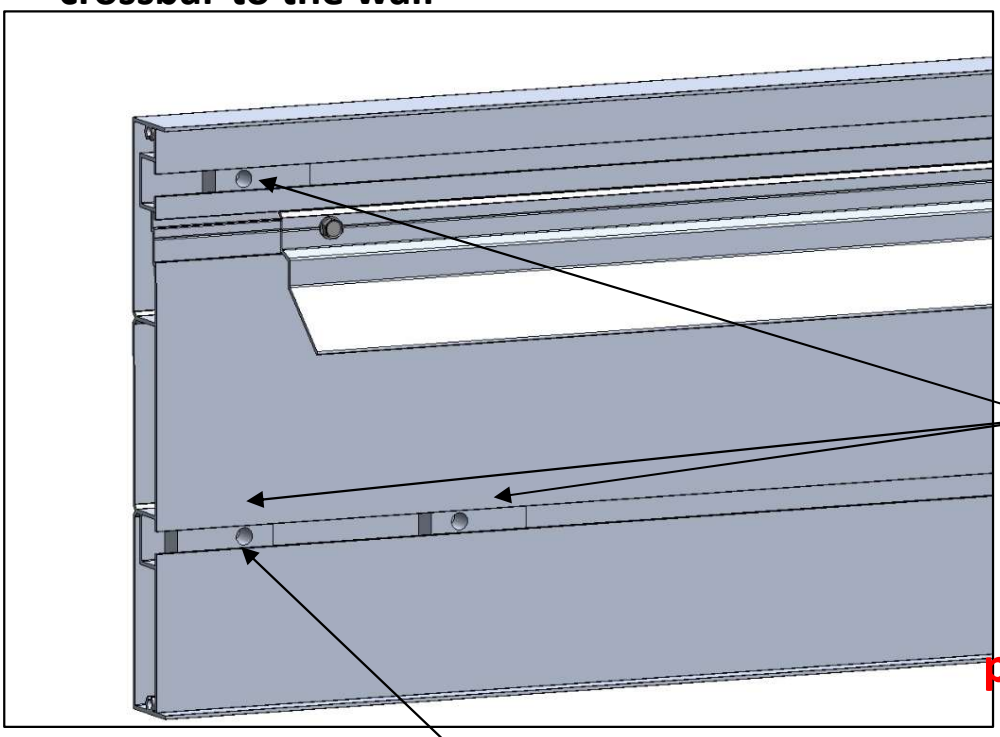

Insérez dans la rainure du haut 1 pièce et dans la rainure du bas 2 pièces.
Effectuez l'opération des deux côtés du sous-assemblage

Insert 1 piece into the top groove and 2 pieces into the bottom groove. Do this on both sides of the sub-assembly

Attention pour les pergolas avec 3 modules sur la largeur, il faut également insérer 2 écrous dans la rainure du haut et 2 dans la rainure du bas, à positionner vers le milieu du profil, pour le montage ultérieur du renfort central

CLA Ecrou/**Nut M8**

Ensuite, vissez une petite plaque de chaque côté à l'aide de 2 rivets 4x16

Then screw a small plate on each side using 2 rivets 4x16

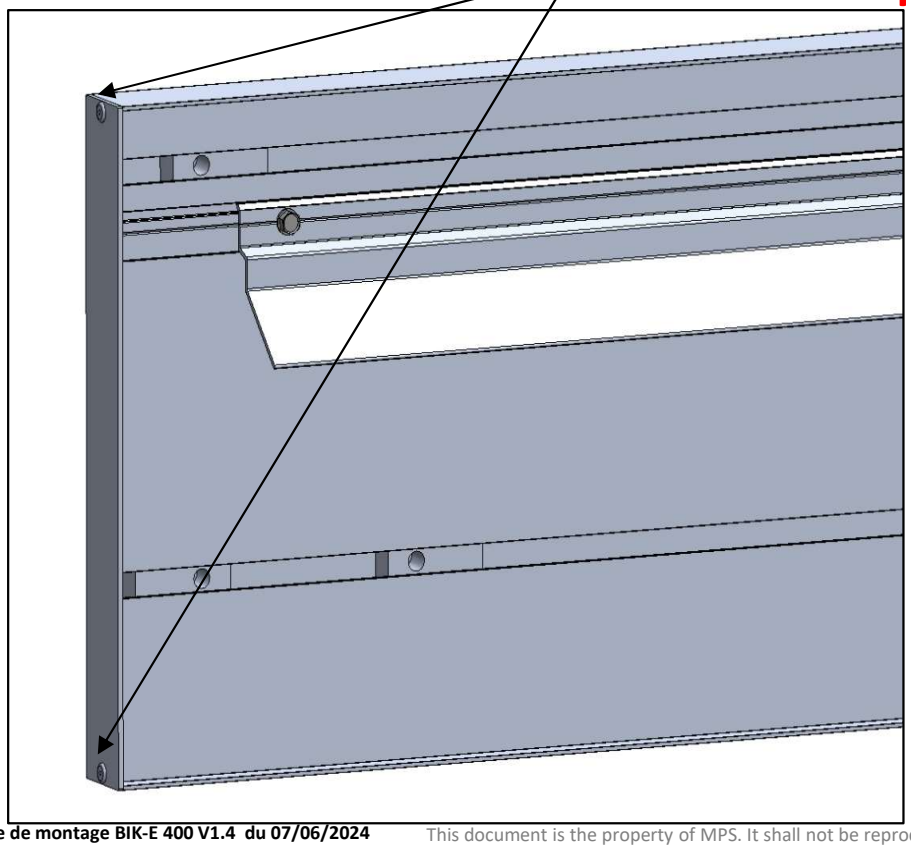

Information and images are non-contactual. We reserve the right to make to make technical changes without notice.

This document is the property of MPS. It shall not be reproduced or shared with third parties without MPS agreement

BIK-E 400 & ROOM-E 400 FACADE

1. Montage de la structure / **Mounting the structure**

B. Fixation du premier longeron transversal sur le mur / **Fixing the first cross beam to the wall**

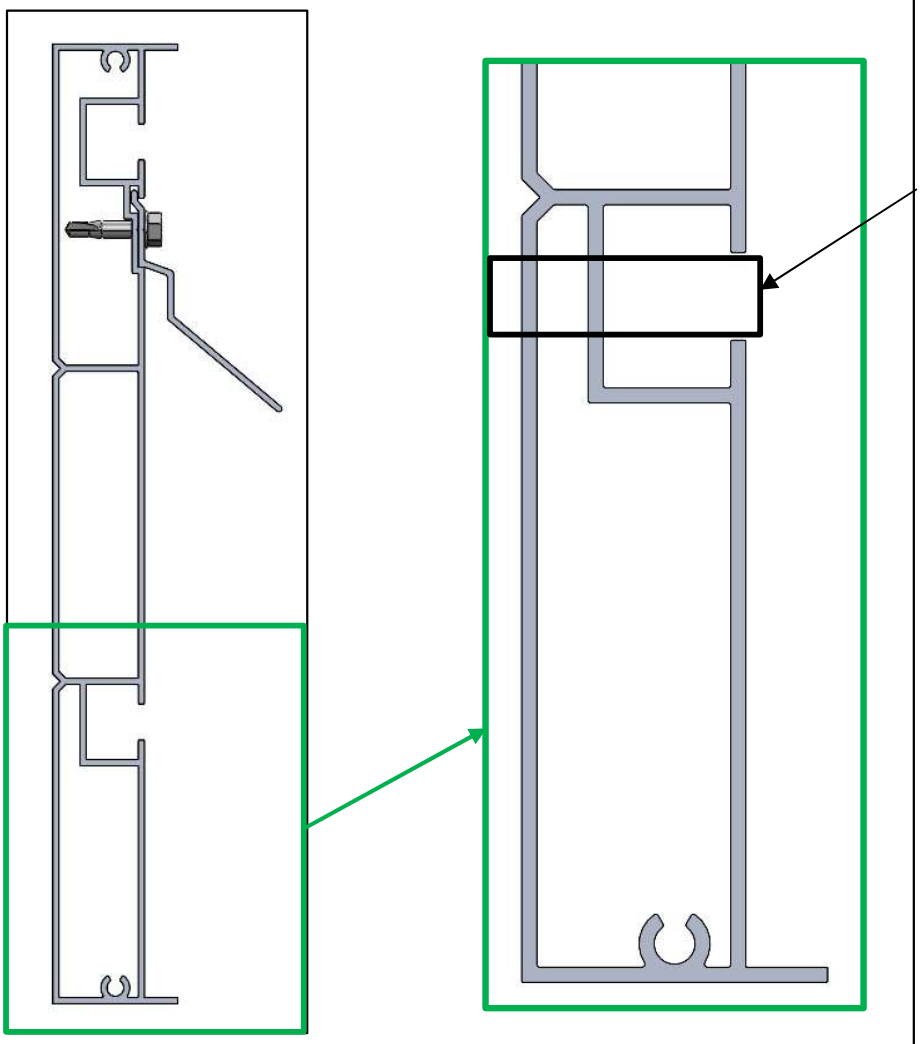

Zone de perçage pour fixation façade
Percez 4 trous de Ø 12, répartis de façon homogène le long de la pièce.
Adaptez la fixation à la nature du mur. Fixation avec des vis Ø 10 mm. Résistance à l'arrachement des points de fixation > 2kN. Kit de vis et rondelles non fourni.
Dans le cas d'installation à l'aide d'un kit de scellement chimique, se référer aux instructions d'utilisation du produit utilisé.

Drilling area for façade fixing
Drill 4 Ø 12 holes, evenly spaced along the part. Adapt the fixing to the nature of the wall. Fixing with Ø 10 mm screws. Tear strength of fixing points > 2kN. Screw and washer kit not supplied. For installation using a chemical sealant kit, refer to the instructions for use of the product used.

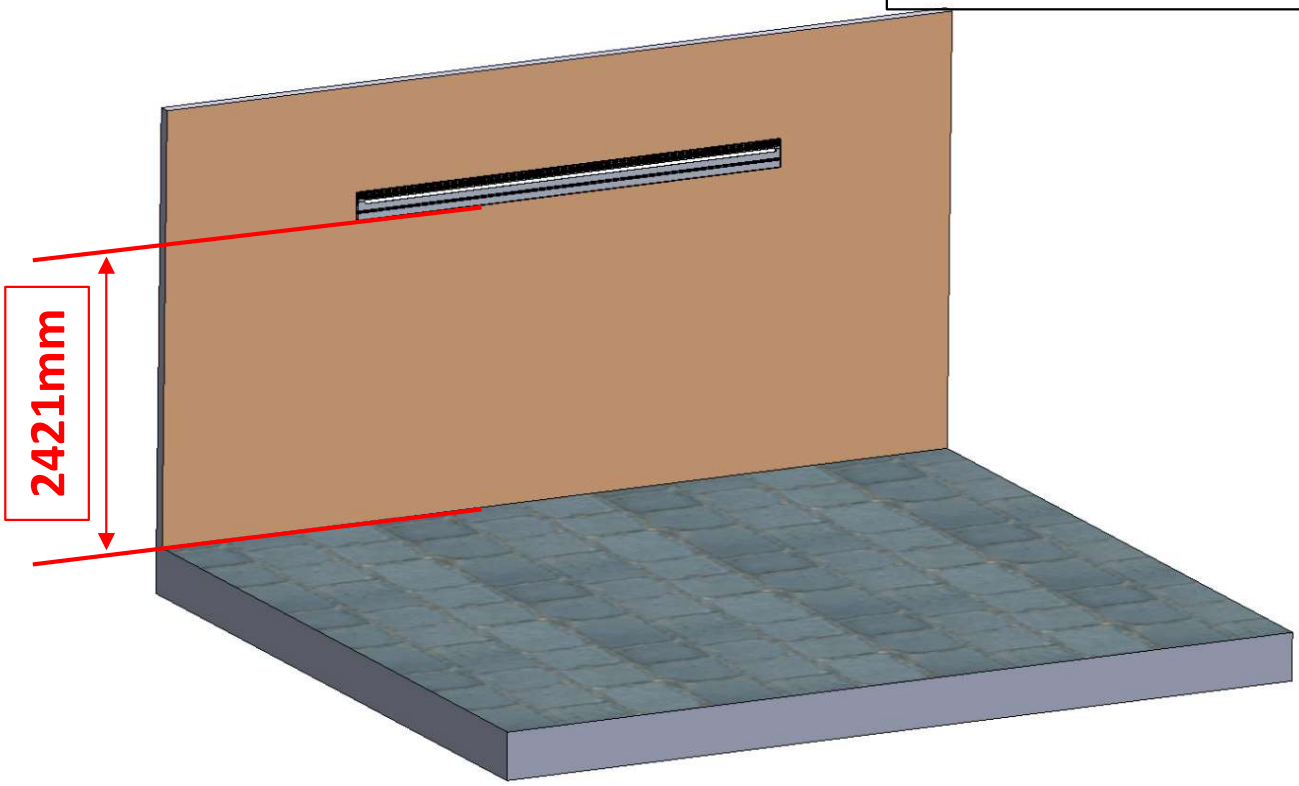

Information and images are non-contactual. We reserve the right to make to make technical changes without notice.

This document is the property of MPS. It shall not be reproduced or shared with third parties without MPS agreement

BIK-E 400 & ROOM-E 400

1. Montage de la structure / **Mounting the structure**

C. Fixation des pieds / **Fixing the feet**

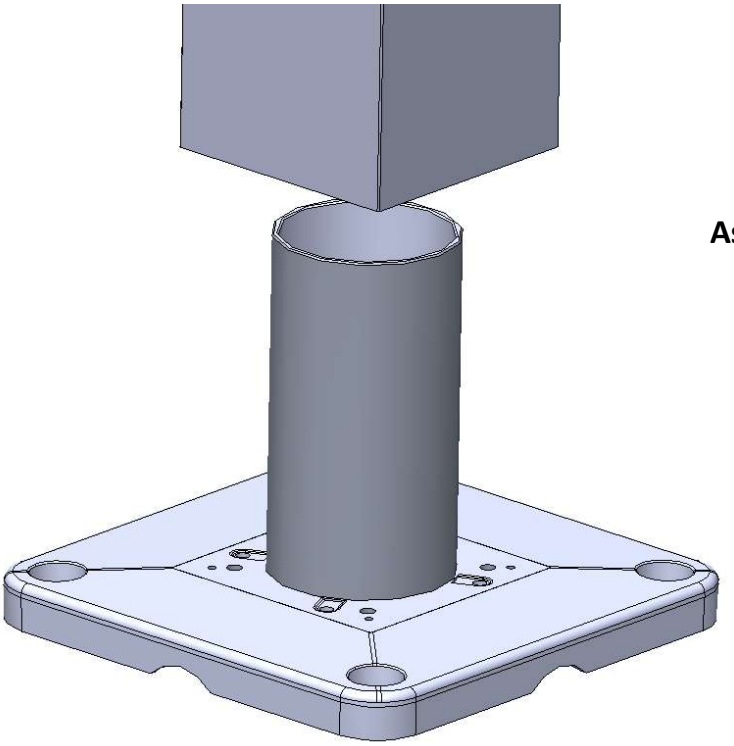

Assemblez le pied
avec 4 vis CHc M8x45

Assemble the foot with 4 CHc M8x45 screws

Fixation au sol sur une dalle béton de 8cm d'épaisseur minimum, ou avec des plots béton de dimension minimum 0,5x0,5x0,5 m
Dans certaines conditions (catégorie de terrain…), ce lestage doit être augmenté : se référer au tableau page 4 qui détermine le poids minimum de lestage à chaque pied.
Mounting to the ground on a concrete slab at least 8cm thick, or with concrete blocks minimum dimensions 0.5x0.5x0.5 m. In certain conditions (category of terrain, etc.), this ballast must be increased: refer to the table on page 4, which specifies the minimum weight of ballast for each foot.

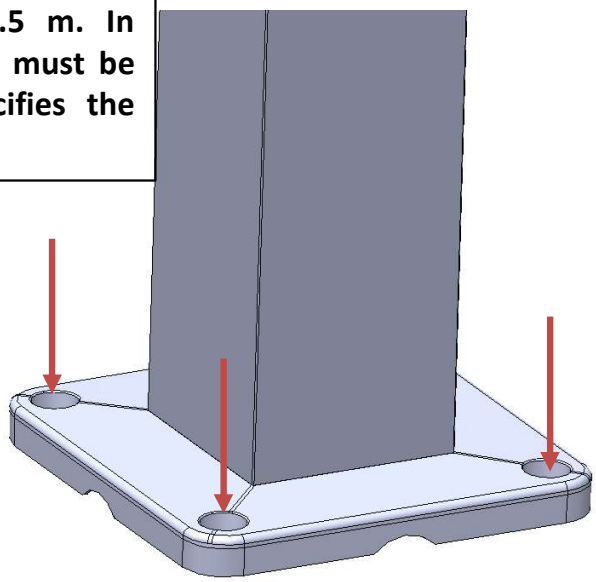

Fixez les embases au sol avec des goujons
(diamètre 10 mm mini)
ou chevilles chimiques selon la nature du sol
R>1,5kN
Fix the subbases to the floor with studs (minimum diameter 10 mm) or chemical dowels depending on the nature of the ground
R>1,5kN

Information and images are non-contactual. We reserve the right to make to make technical changes without notice.

This document is the property of MPS. It shall not be reproduced or shared with third parties without MPS agreement

BIK-E 400 & ROOM-E 400

1. Montage de la structure / **Mounting the structure**

C. Fixation des pieds / **Fixing the feet**

Voici le résultat que vous devez avoir
This is the result you should get

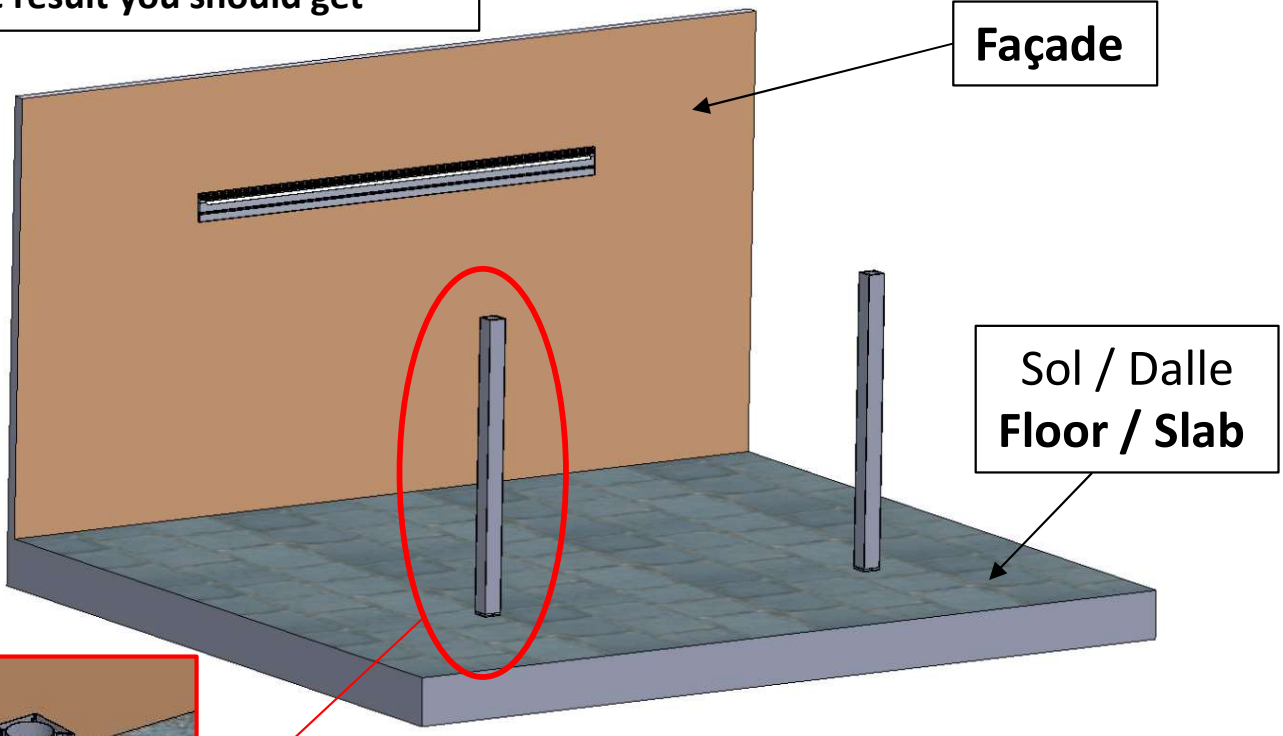

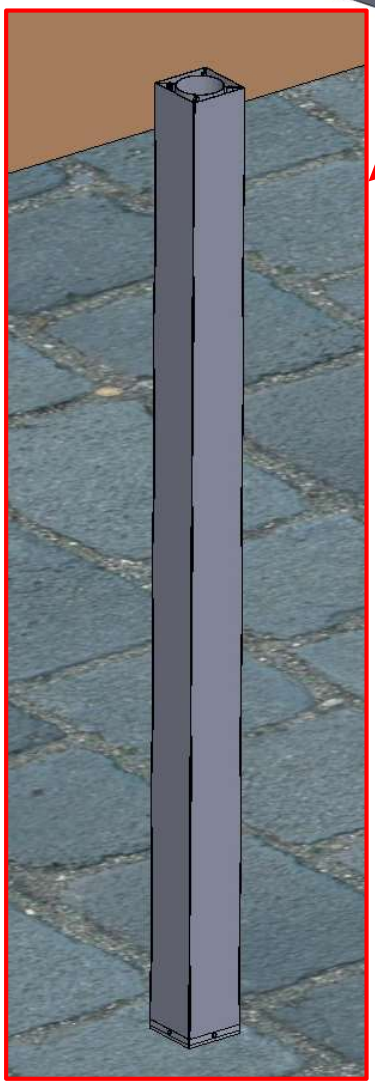

Vous retrouvez la distance entre la façade et les poteaux à la page 10
The distance between the façade and the posts can be found on page 10.

Information and images are non-contactual. We reserve the right to make to make technical changes without notice.

This document is the property of MPS. It shall not be reproduced or shared with third parties without MPS agreement

BIK-E 400 & ROOM-E 400

1. Montage de la structure / **Mounting the structure**

D. Montage des longerons latéraux / **Mounting the side beams**

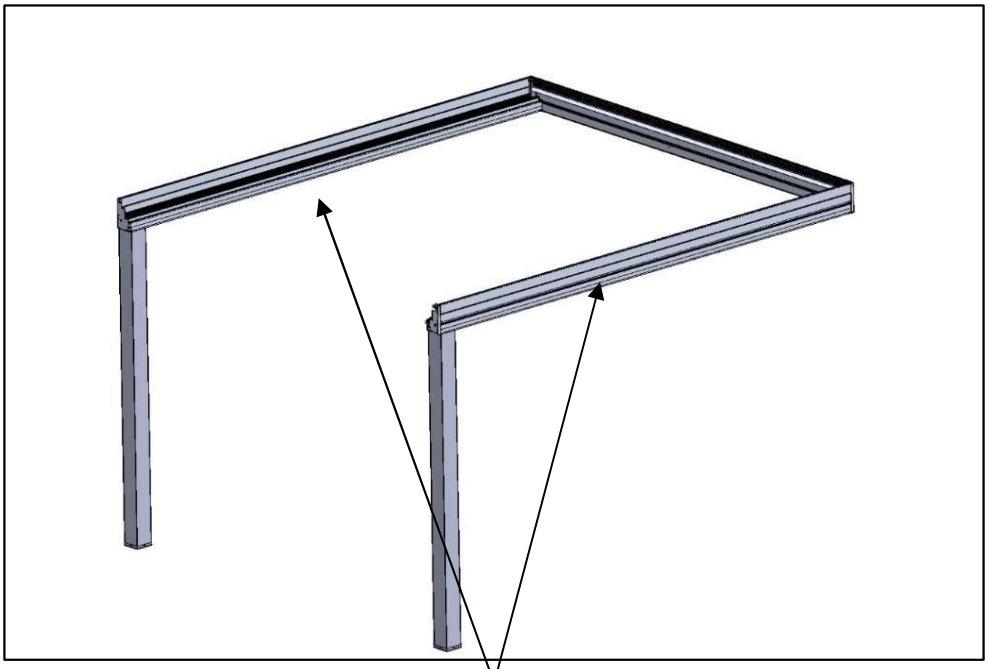

Préparation des longerons
Preparing the side beams

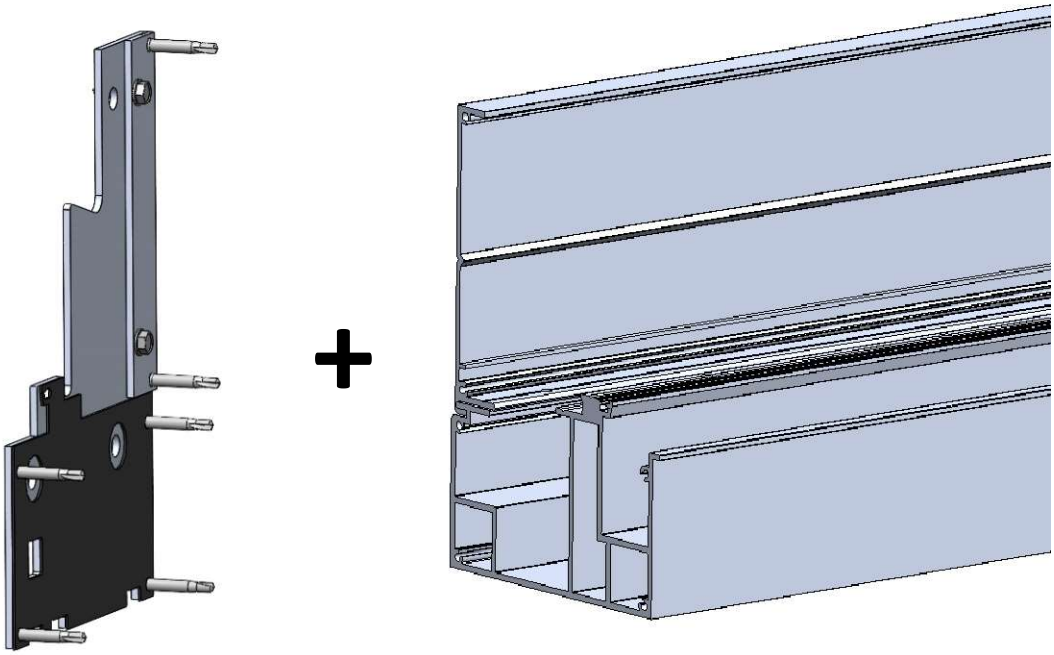

Information and images are non-contactual. We reserve the right to make to make technical changes without notice.

This document is the property of MPS. It shall not be reproduced or shared with third parties without MPS agreement

BIK-E 400 & ROOM-E 400

1. Montage de la structure / **Mounting the structure**

D. Montage des longerons latéraux / **Mounting the side beams**

Etapes de préparation des longerons :
1 – Assemblez les deux parties du longeron
2 – Vissez la zone bleue au longeron (plat + 2 vis auto taraudeuses H4,8x19)
3 – Posez le joint sur le longeron
4 – Vissez la zone rouge par-dessus le joint et la plaque de la première étape

Steps for preparing the side beams :
1 - Assemble the two parts of the beam
2 - Screw the blue area to the beam (flat + 2 self-tapping screws H4.8x19)
3 - Place the gasket on the beam
4 - Screw the red area over the gasket and the plate from the first stage

Etape 1 : Assemblez les deux parties du longeron de la même manière que sur l'image

Step 1: Assemble the two parts of the beam in the same way as shown in the picture.

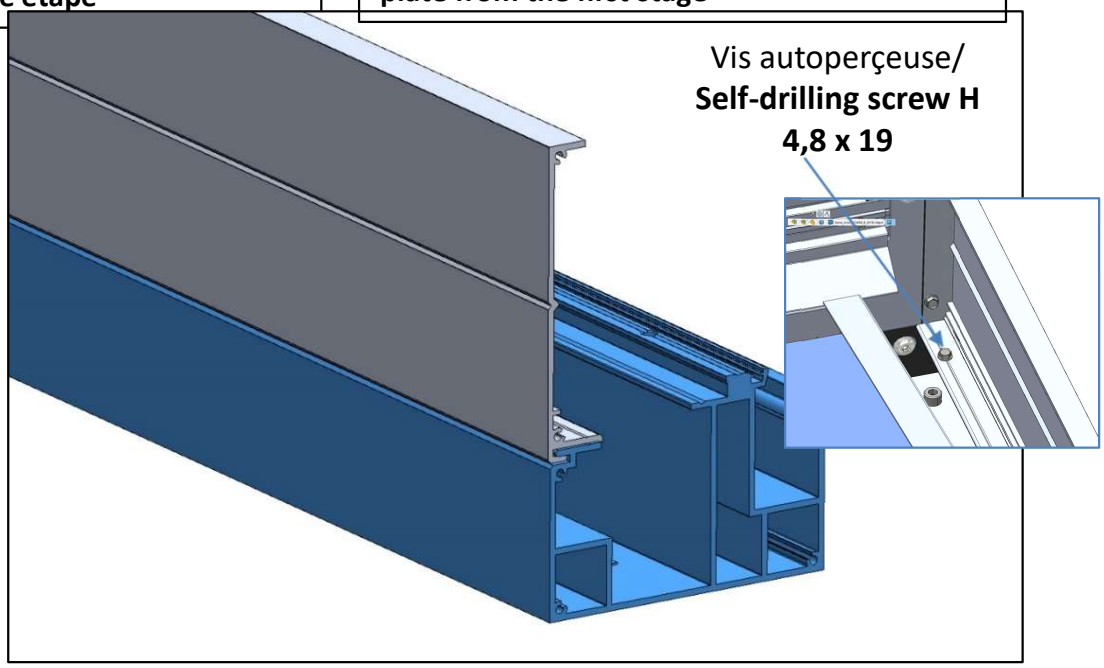

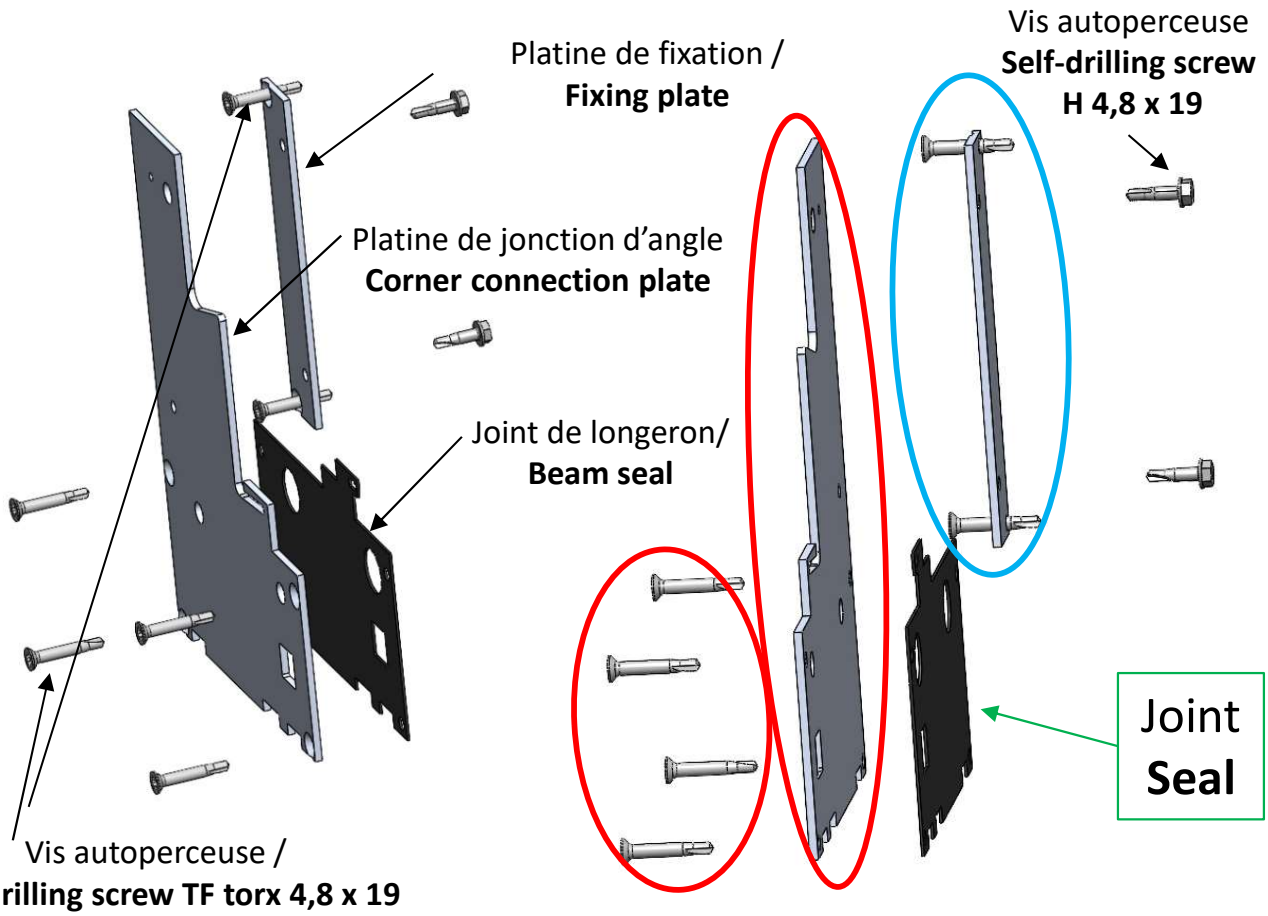

Information and images are non-contactual. We reserve the right to make to make technical changes without notice.

This document is the property of MPS. It shall not be reproduced or shared with third parties without MPS agreement

BIK-E 400 & ROOM-E 400

1. Montage de la structure / **Mounting the structure**

D. Montage des longerons latéraux / **Mounting the side beams**

Etape 2 : Assemblez la petite plaque dans le longeron à l'aide des deux vis torx

Step 2: Assemble the small plate in the beam using the two torx screws

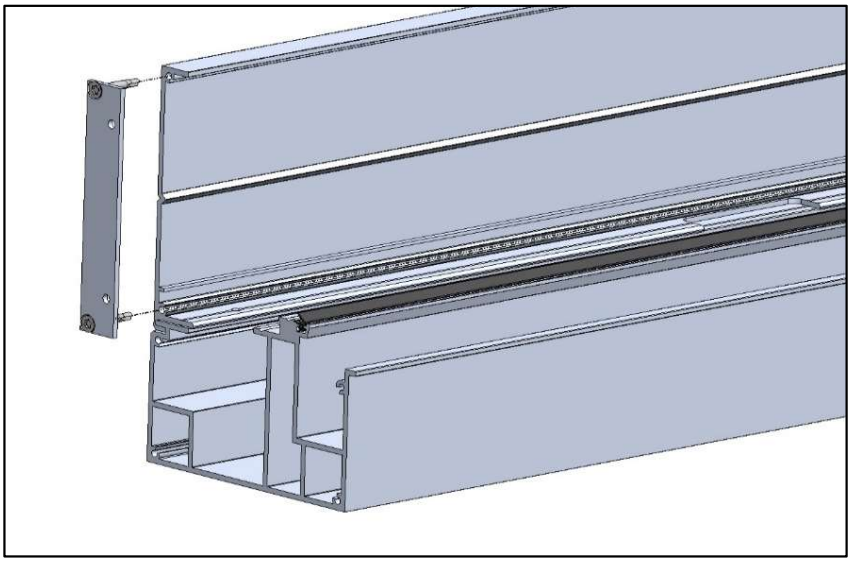

Etape 3 : Placez le joint de la manière suivante

Step 3: Position the seal as follows

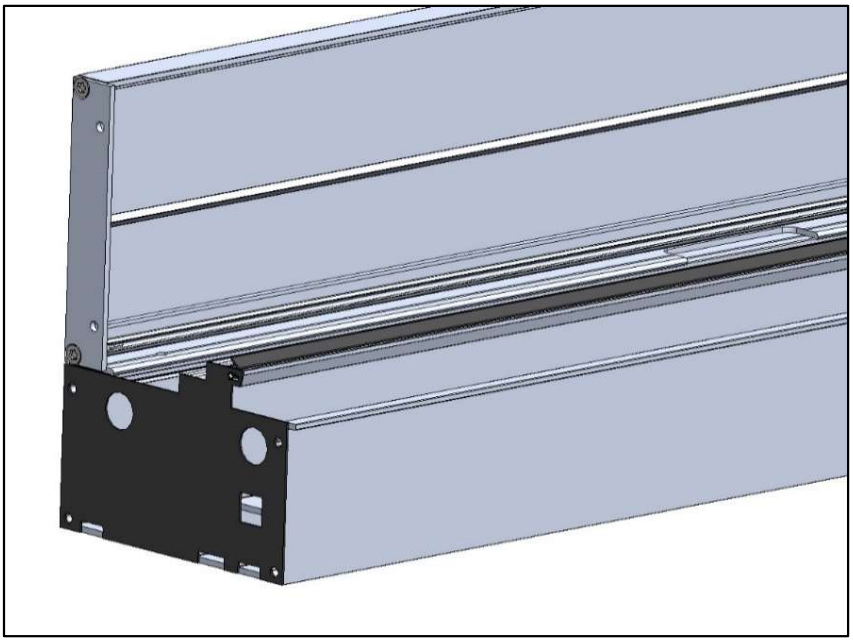

Etape 4 : Vissez par-dessus la petite plaque et le joint, la grande plaque à l'aide de 4 vis torx

Step 4: Screw the large plate over the small plate and gasket using 4 torx screws.

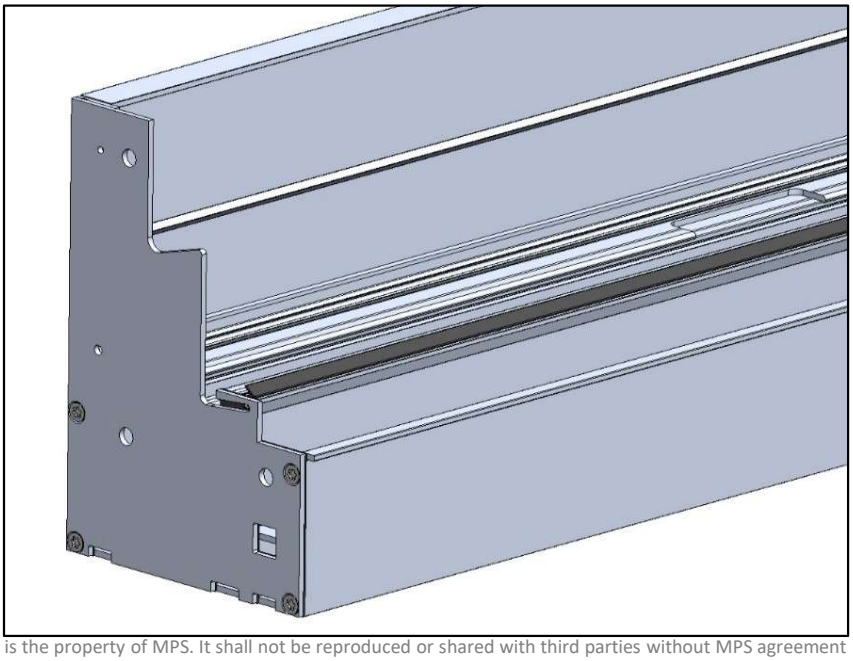

Information and images are non-contactual. We reserve the right to make to make technical changes without notice.

This document is the property of MPS. It shall not be reproduced or shared with third parties without MPS agreement

BIK-E 400 & ROOM-E 400

1. Montage de la structure / **Mounting the structure**

D. Montage des longerons latéraux / **Mounting the side beams**

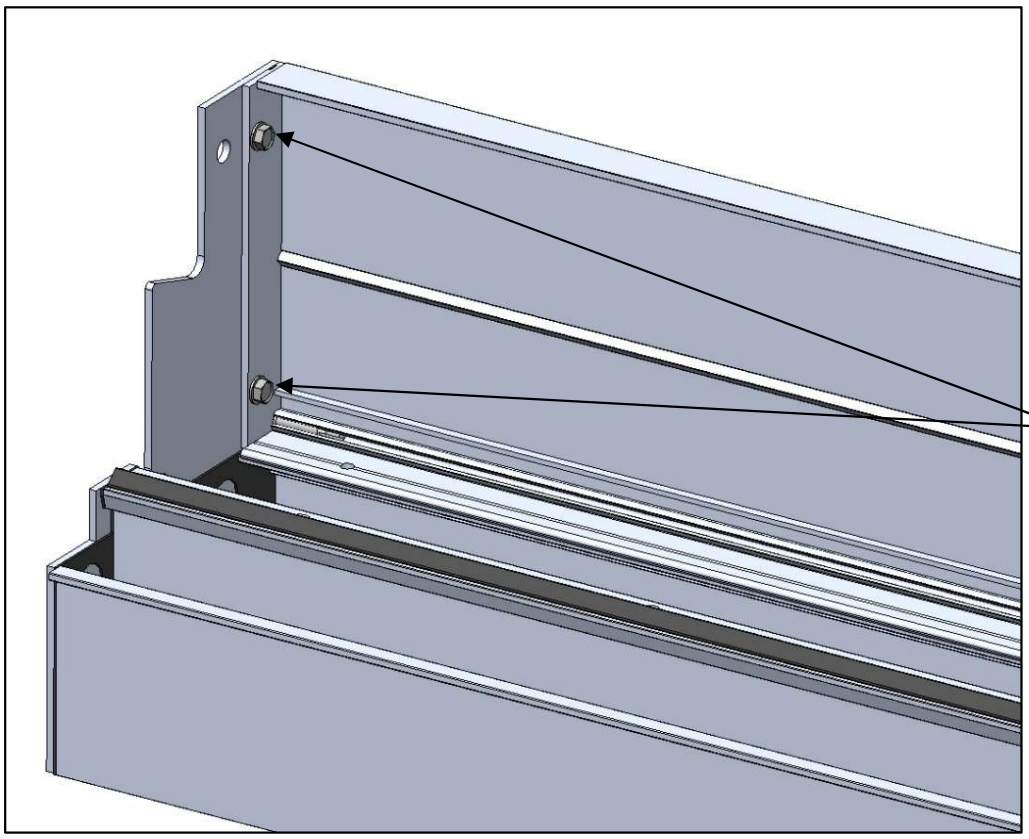

Il ne vous reste plus qu'à visser les deux plaques entres elles à l'aide de 2 vis auto-foreuses.

All that's left is to screw the two plates together using 2 self-drilling screws.

Répétez cette opération pour les extrémités des 2 longerons
Repeat this operation for the ends of the 2 longitudinal beams.

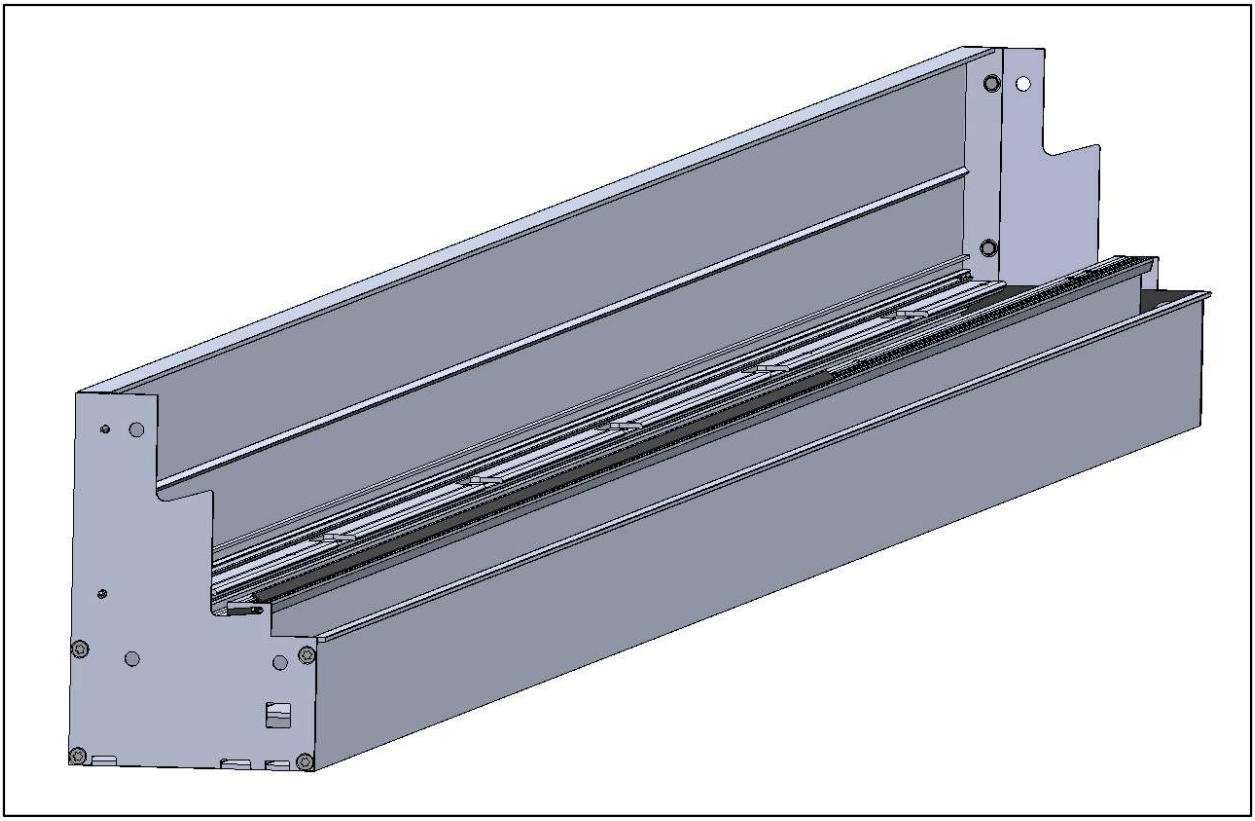

Information and images are non-contactual. We reserve the right to make to make technical changes without notice.

This document is the property of MPS. It shall not be reproduced or shared with third parties without MPS agreement

BIK-E 400 & ROOM-E 400

1. Perçage des caniveaux pour fixer les pieds et monter l'évacuation de l'eau / **Drilling the gutters to fix the feet and fit the water draining**

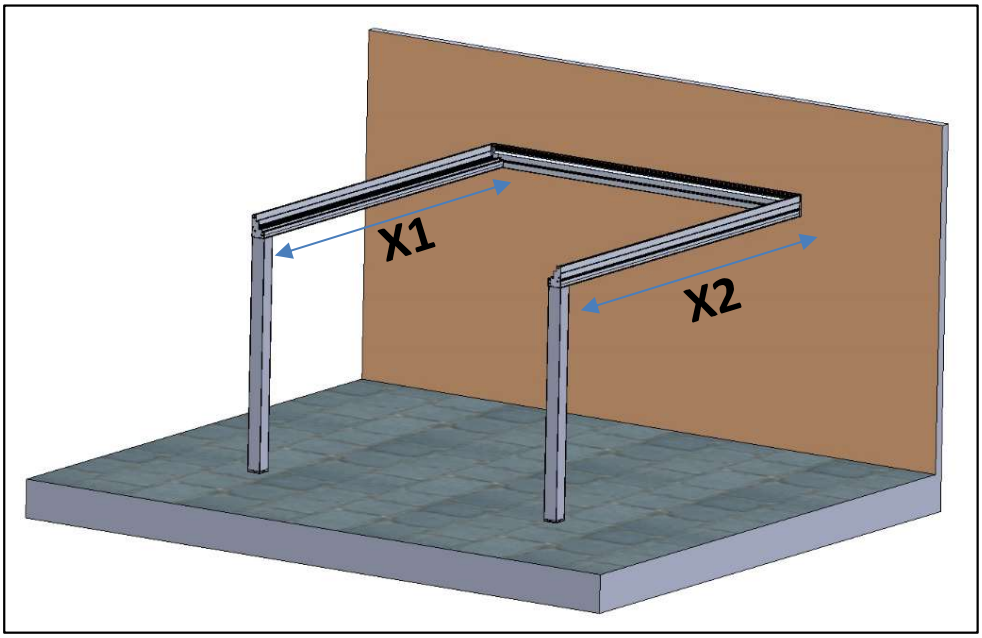

Déterminez la position X1 et X2 des pieds
Mur à Axe des pieds
Determine the X1 and X2 position of the feet
Wall to Feet Axis

Outillage de perçage
Drilling tool

Positionnez l'outillage de perçage sous le longeron
Position the drilling tool under the beam

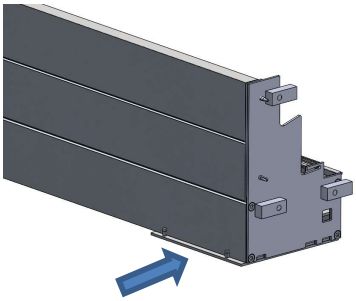

Retournez l'ensemble puis percez :
- 4 trous diamètre 9
- 1 trou diamètre 4

- **Turn the assembly over and drill :**
- **4 holes diameter 9**
- **1 hole diameter 4**

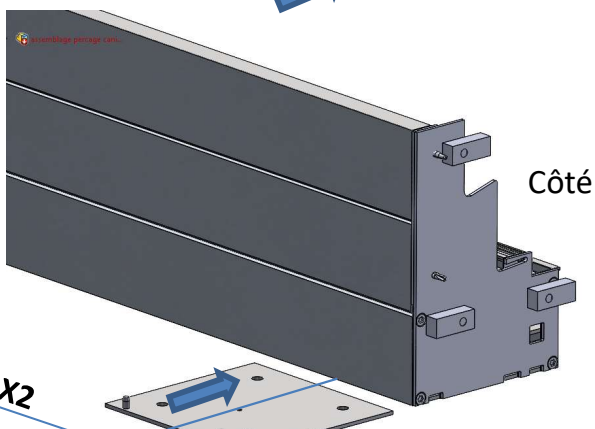

Côté intérieur/**Inside pergola**

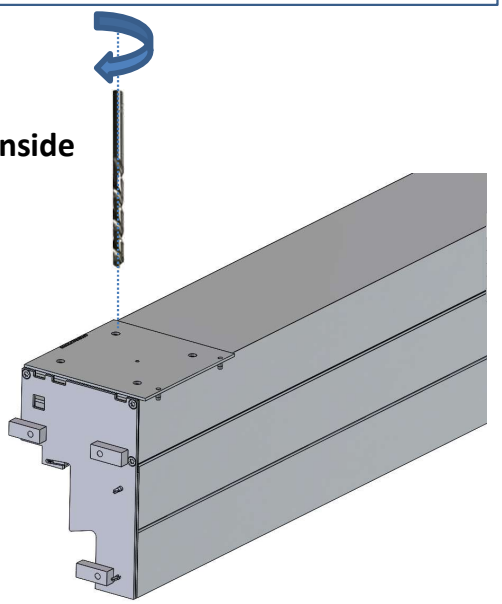

X1 ou X2

Axe du pied/**Foot axis**

Amenez l'outillage en butée sur les pions
Bring the tool as far as possible on the pins

Information and images are non-contactual. We reserve the right to make to make technical changes without notice.

This document is the property of MPS. It shall not be reproduced or shared with third parties without MPS agreement

BIK-E 400 & ROOM-E 400

1. Perçage des caniveaux (évacuation de l'eau) / **Drilling the gutters (water draining)**

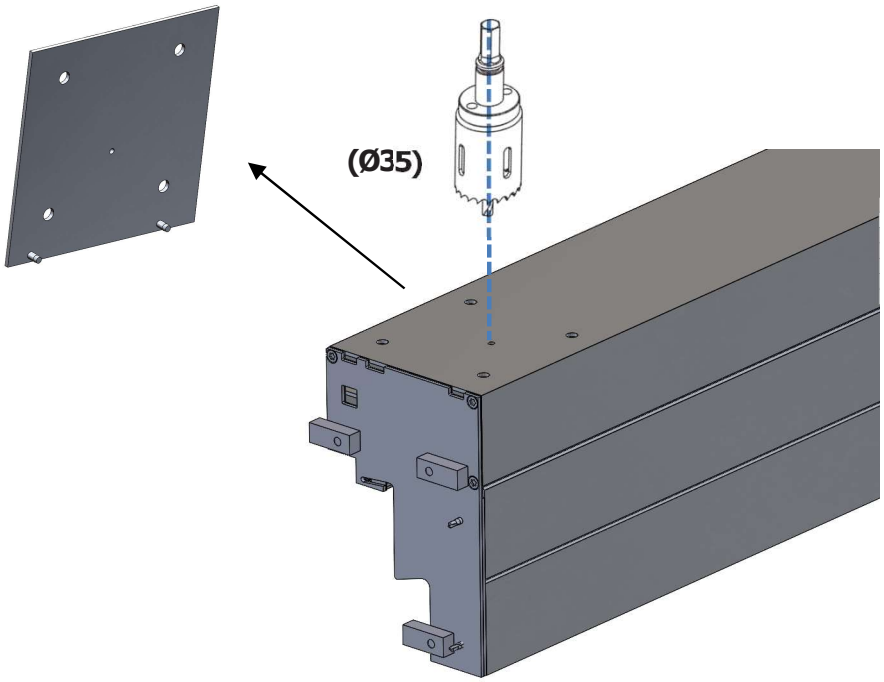

Retirez l'outillage et percer à la scie cloche diamètre 35 le trou central

Remove the tool and drill the central hole using a 35 mm diameter hole saw

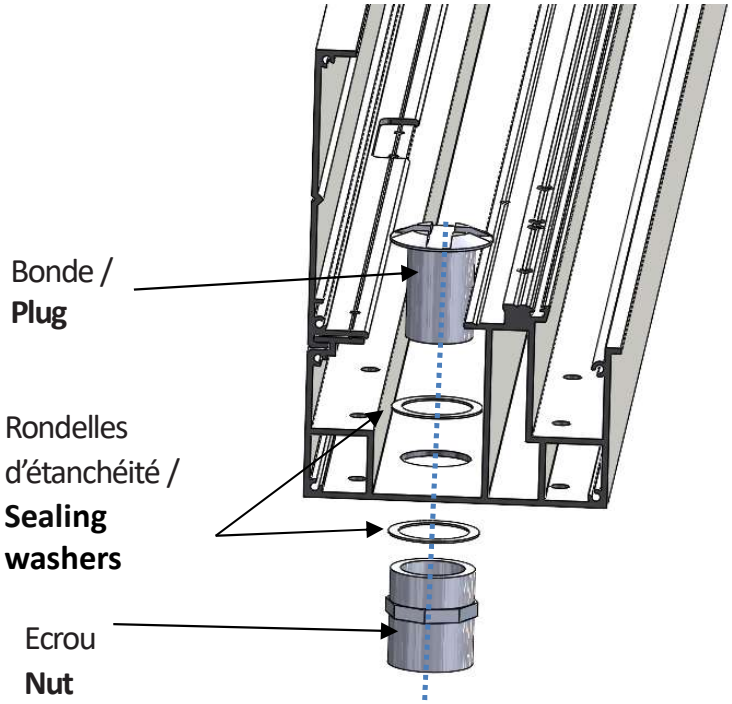

Montez le kit d'évacuation. (Possibilité de le raccorder avec un tuyau souple ou PVC rigide)

Fit the drainage kit.(Possibility of connecting it with a flexible or rigid PVC pipe)

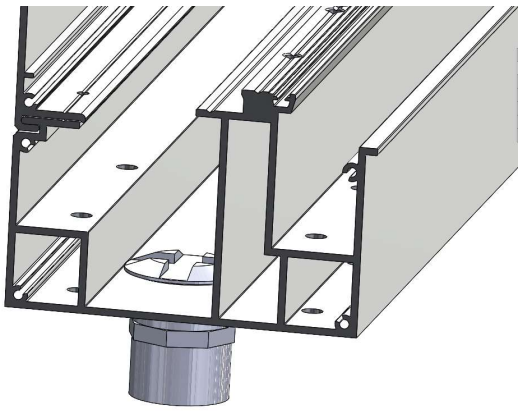

Information and images are non-contactual. We reserve the right to make to make technical changes without notice.

This document is the property of MPS. It shall not be reproduced or shared with third parties without MPS agreement

BIK-E 400 & ROOM-E 400

1. Montage de la structure / **Mounting the structure**

D. Montage des longerons latéraux / **Fitting the side beams**

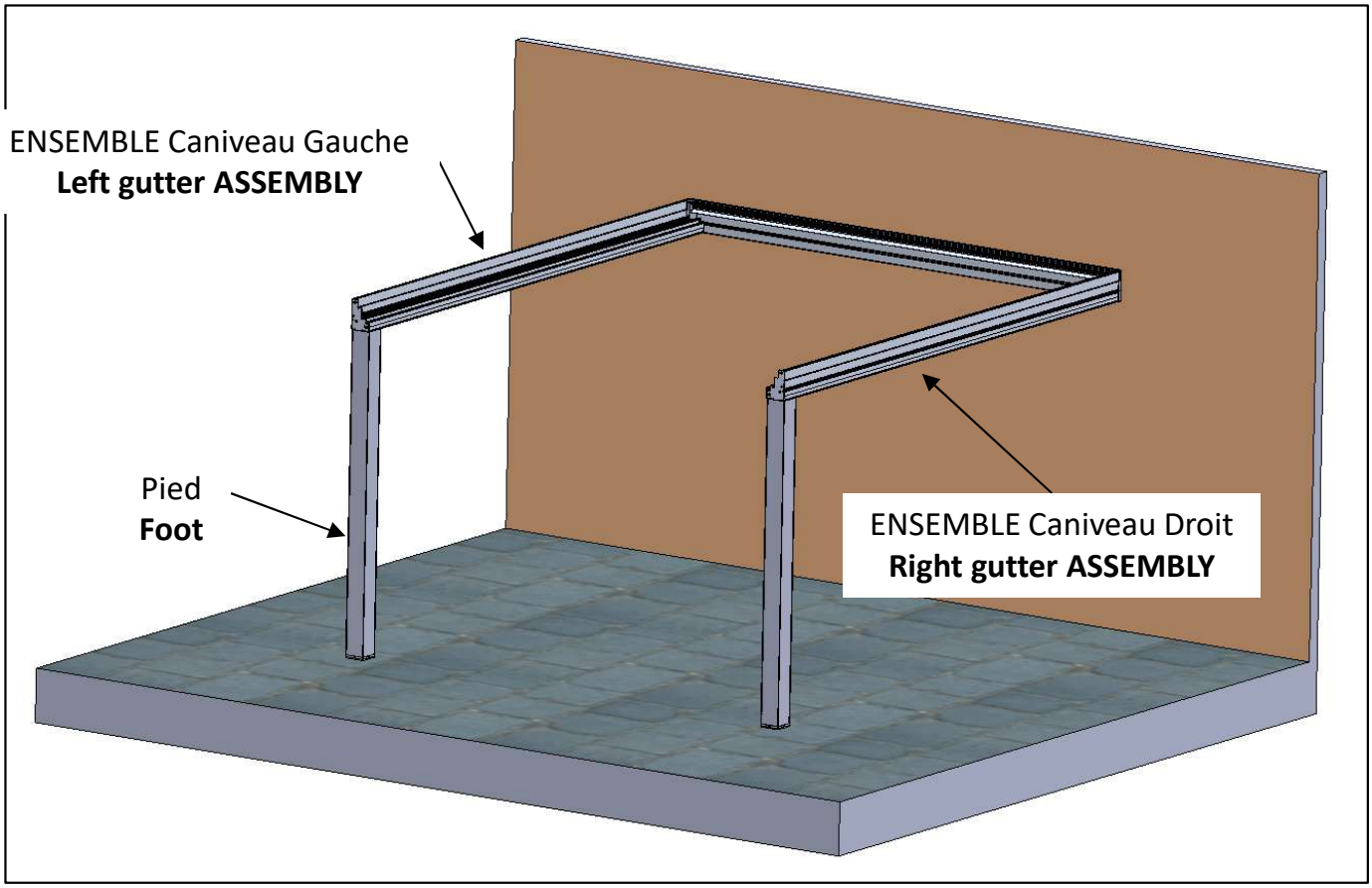

Vous allez avoir besoin d'un élévateur pour fixer les longerons sur les pieds ainsi qu'à la partie fixée au mur.
You'll need a portable lift to attach the beams to the legs and to the part fixed to the wall.

Après avoir élevé le longeron, faites-le glisser dans la partie qui est fixée au mur.
After raising the beam, slide it into the part that is fixed to the wall.

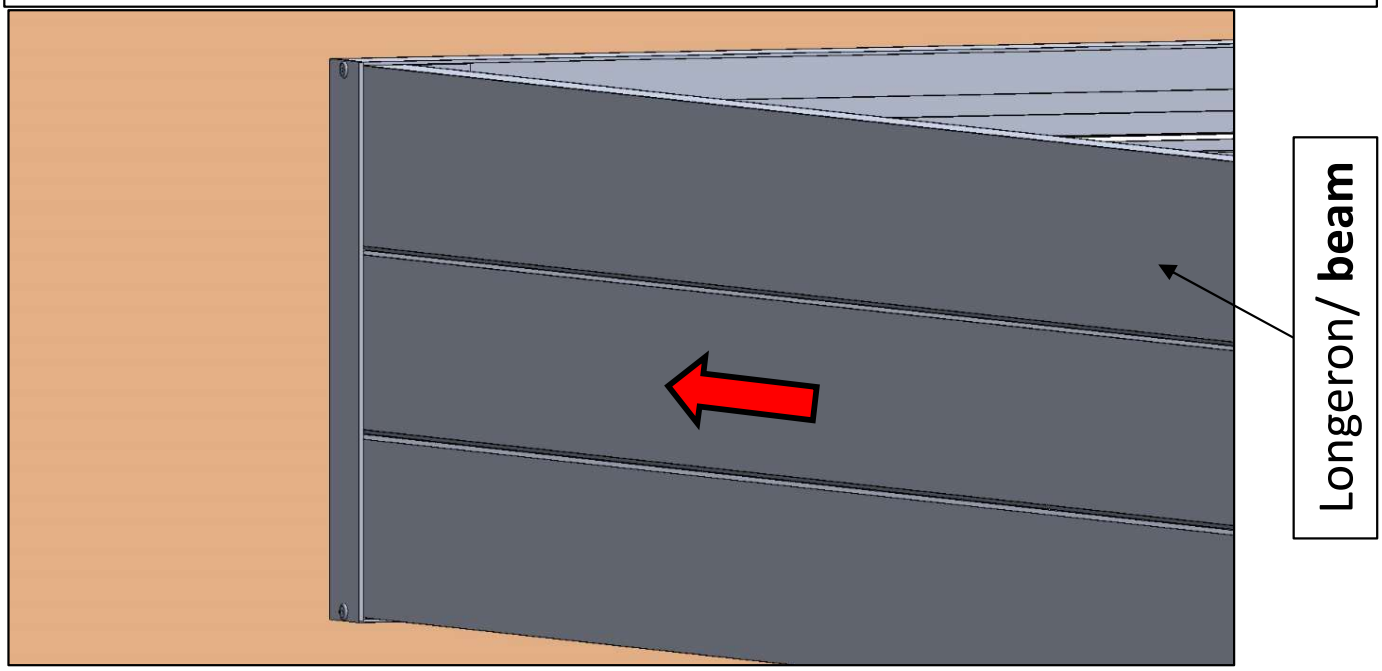

Information and images are non-contactual. We reserve the right to make to make technical changes without notice.

This document is the property of MPS. It shall not be reproduced or shared with third parties without MPS agreement

BIK-E 400 & ROOM-E 400

1. Montage de la structure / **Mounting the structure**

D. Montage des longerons latéraux / **Mounting the side beams**

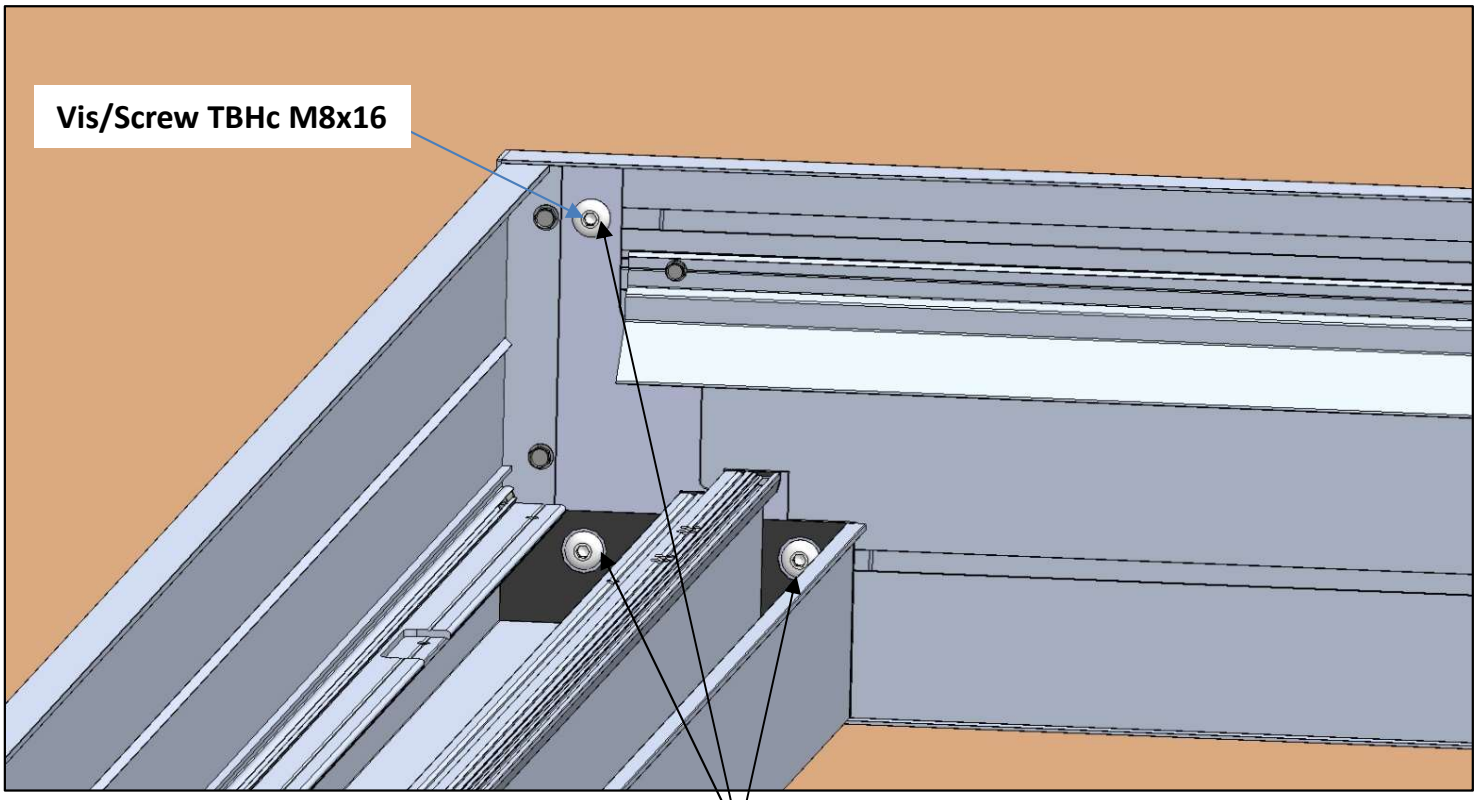

Une fois le longeron inséré dans la partie murale, vissez-le à cette partie à l'aide de 3 vis. Elles doivent se visser dans les 3 petites pièces que vous avez insérées précédemment (voir p. 15). Ensuite, placez le longeron sur le pied et vissez-le au pied à l'aide de 4 vis.

Once the side beam has been inserted into the wall section, screw it to the wall section using 3 screws. These screws must fit into the 3 small parts you inserted earlier (see p. 15). Next, place the beam on the foot and screw it to the foot using 4 screws.

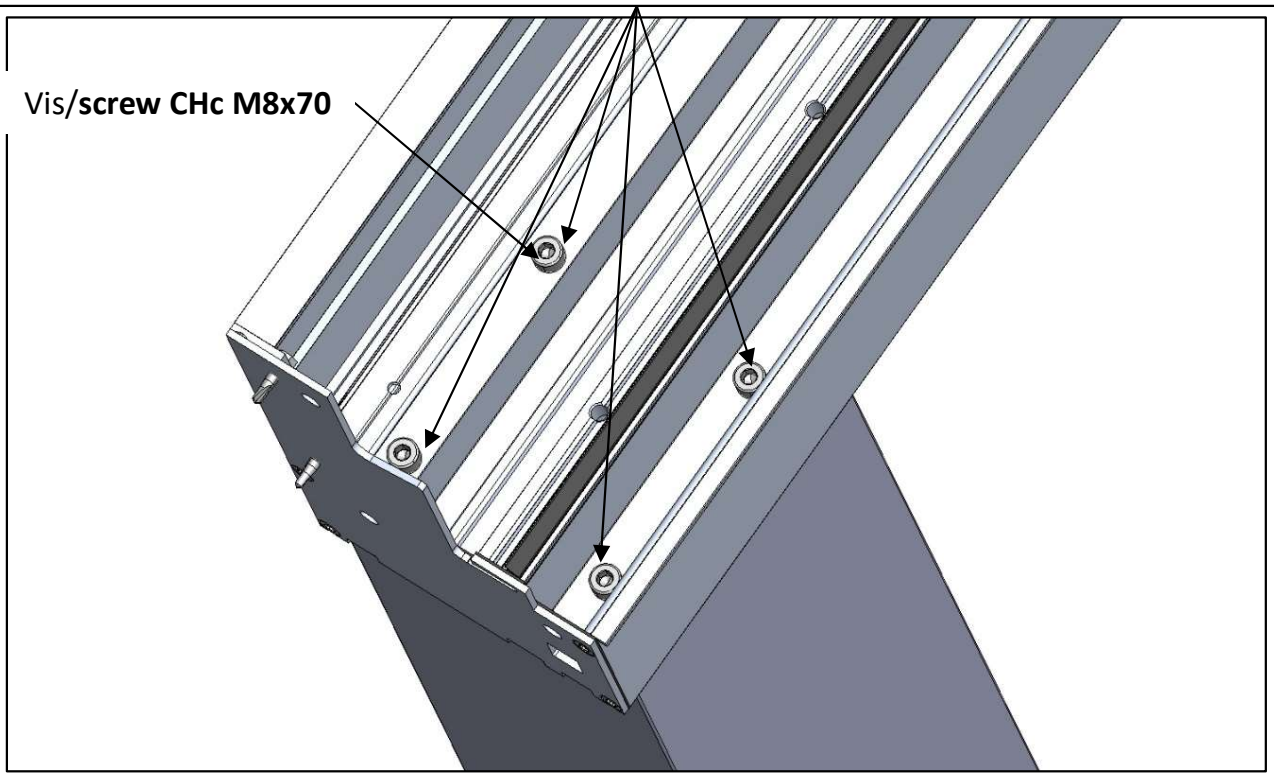

Information and images are non-contactual. We reserve the right to make to make technical changes without notice.

This document is the property of MPS. It shall not be reproduced or shared with third parties without MPS agreement

BIK-E 400 & ROOM-E 400

1. Montage de la structure / **Mounting the structure**

D. Montage des longerons latéraux / **Mounting the side beams**

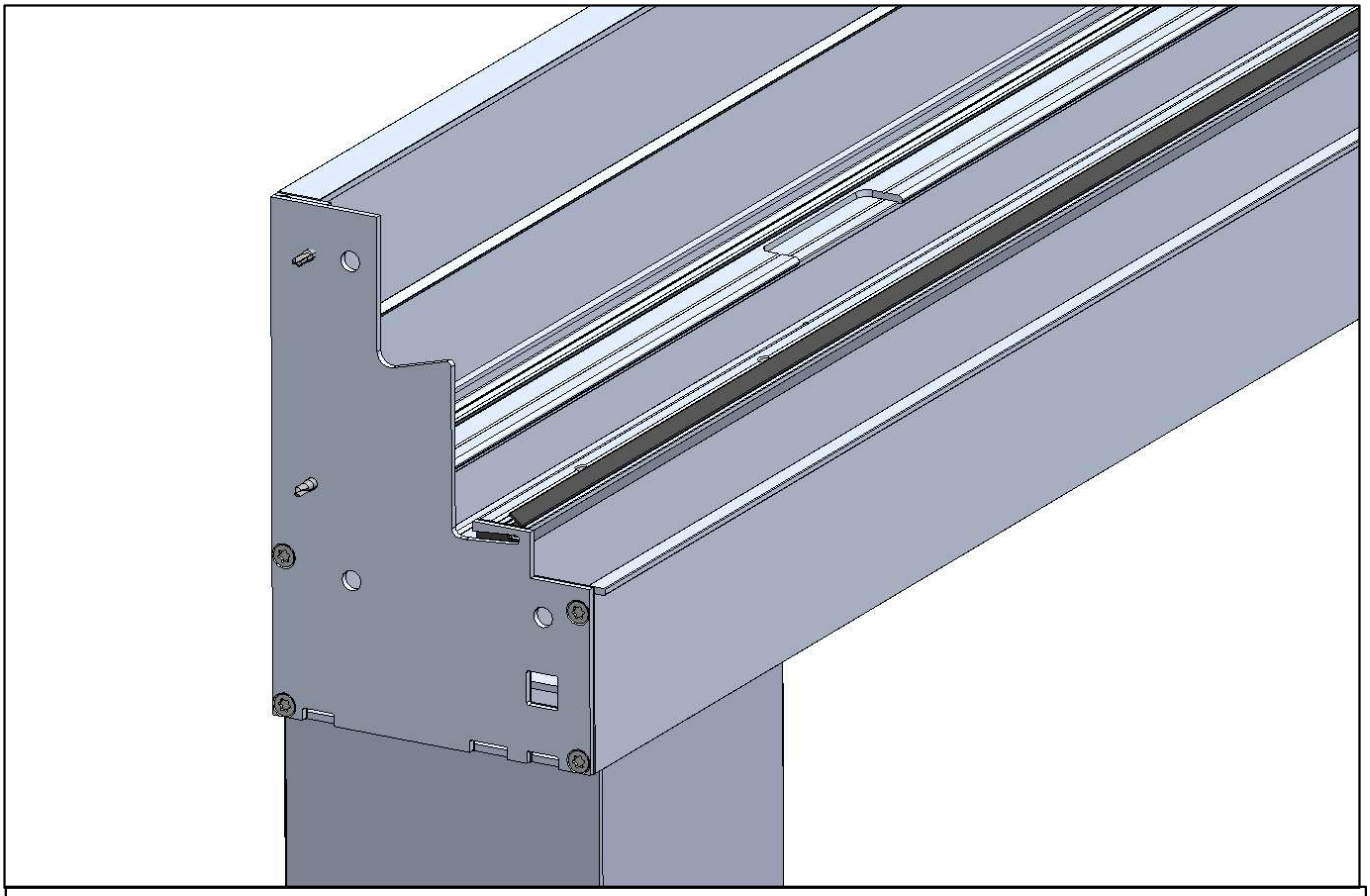

Une fois le premier longeron fixé, faites de même pour le deuxième /
Once you have fixed the first beam, do the same for the second.

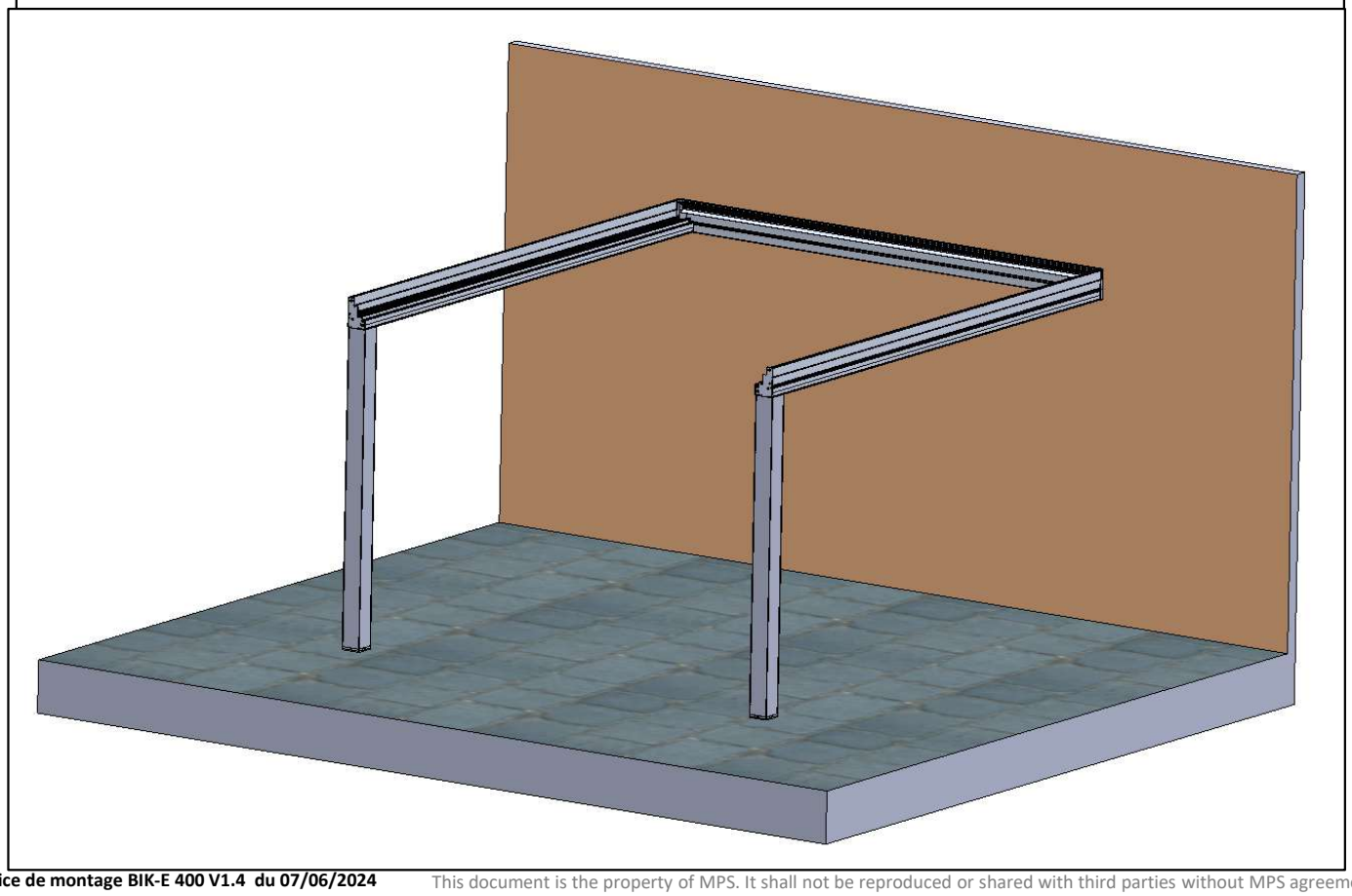

Information and images are non-contactual. We reserve the right to make to make technical changes without notice.

This document is the property of MPS. It shall not be reproduced or shared with third parties without MPS agreement

BIK-E 400 & ROOM-E 400

1. Montage de la structure / **Mounting the structure**

E. Montage du deuxième longeron transversal / **Fitting the second cross beam**

Maintenant, vous devez préparer le même sous-assemblage que celui qui est fixé contre le mur.
(Voir les différentes étapes en amont de cette notice)
Now you need to prepare the same sub-assembly as the one fixed to the wall.(See the various steps at the beginning of these instructions)

Attention ! Vous n'avez pas besoin de percer cette partie car elle ne va pas être fixée à un mur, mais bien aux 2 longerons latéraux.
Please note! You don't need to drill a hole in this part because it won't be fixed to a wall, but to the 2 side beams.

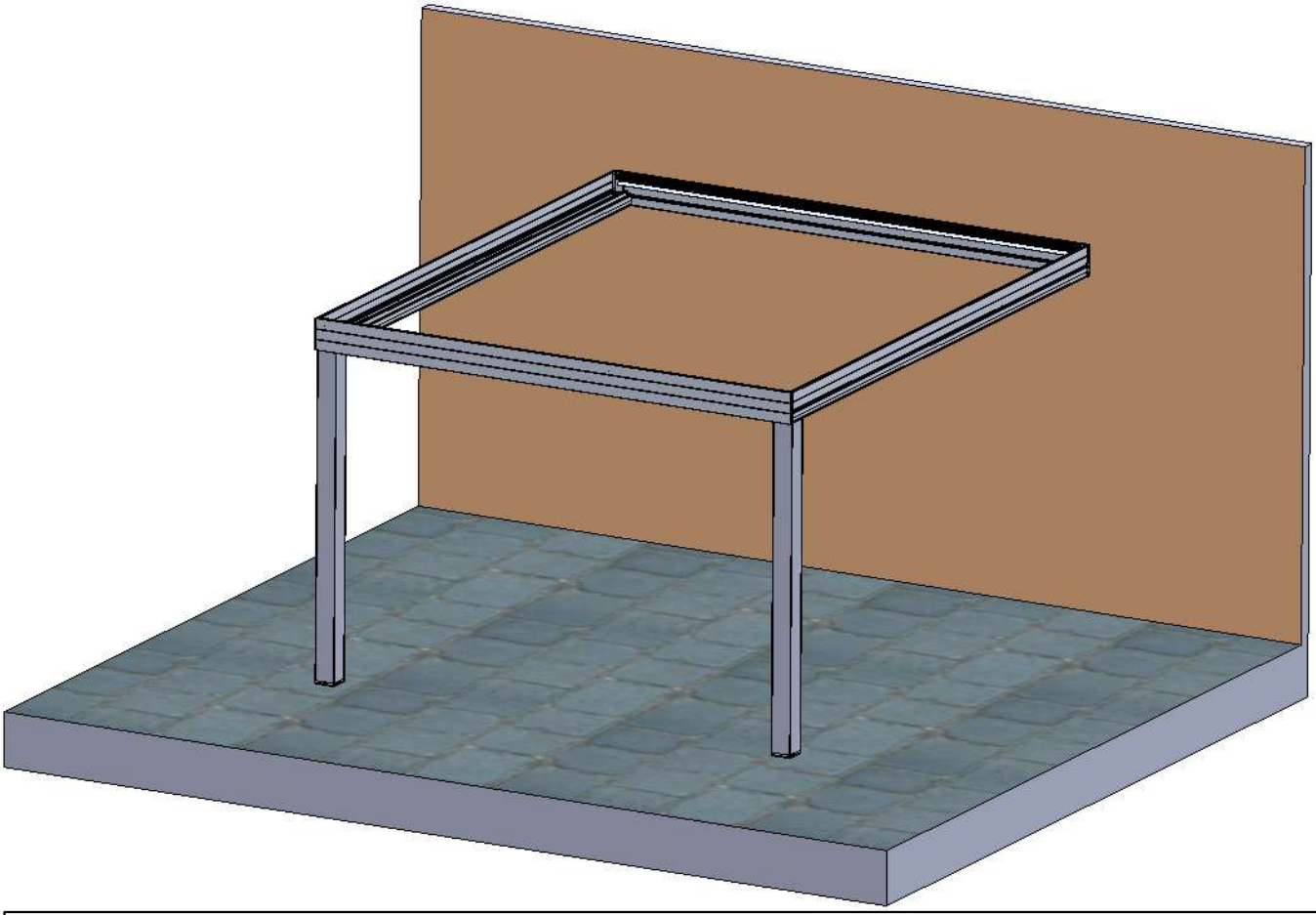

Vous avez maintenant terminé de monter la structure.
You have now finished assembling the structure.

Si votre CLASS-E 400 est en îlot, et non en façade, vous avez juste à fixer les 4 pieds au sol, puis y visser les longerons au-dessus ainsi que les parties allant au bout des longerons.
If your CLASS-E 400 is free-standing, and not a wall-mounted unit, all you have to do is fix the 4 feet to the floor, then screw the beams above and as well as the ends of the beams.

Information and images are non-contactual. We reserve the right to make to make technical changes without notice.

This document is the property of MPS. It shall not be reproduced or shared with third parties without MPS agreement

BIK-E 400 & ROOM-E 400

1. Montage de la structure / **Mounting the structure**

Montez les fermetures sur les supports avant et arrière /
Fit the fasteners to the front and rear brackets

Montez les 4 fermetures longeron
avec des rivets Noir 4x16

Fit the 4 beam fasteners with 4x16 black rivets

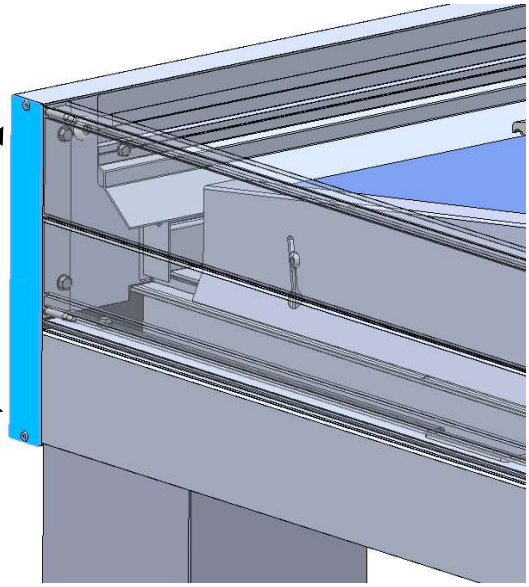

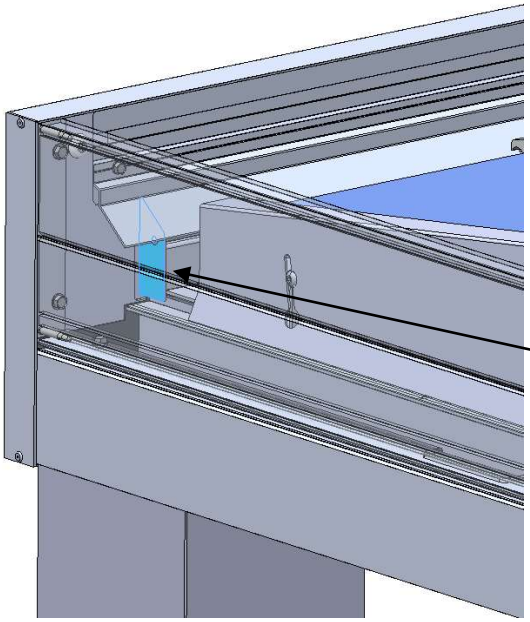

Montez les 2 fermetures support avant
avec des rivets Noir 4x16

Fit the 2 front support fasteners with 4x16 black rivets

Montez les 2 fermetures support arrière
avec des rivets Noir 4x16

Fit the 2 rear support fasteners with 4x16 black rivets

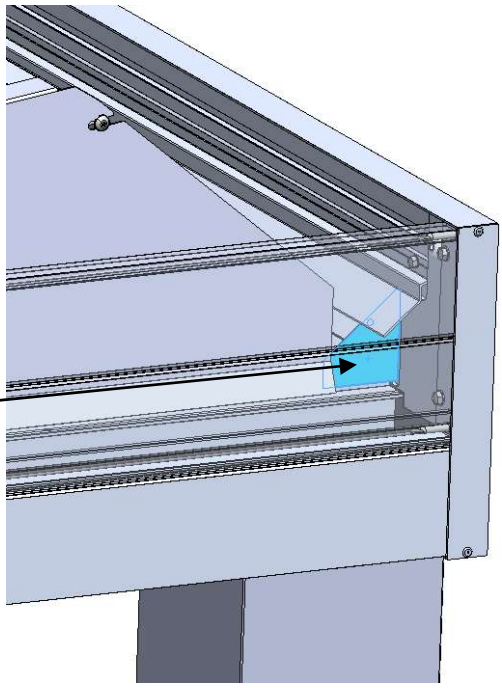

Information and images are non-contactual. We reserve the right to make to make technical changes without notice.

This document is the property of MPS. It shall not be reproduced or shared with third parties without MPS agreement

BIK-E 400 & ROOM-E 400

2. Montage de la toiture / **Mounting the roof**

A. Préparation et assemblage des grandes traverses / **Preparing and assembling large cross-bars**

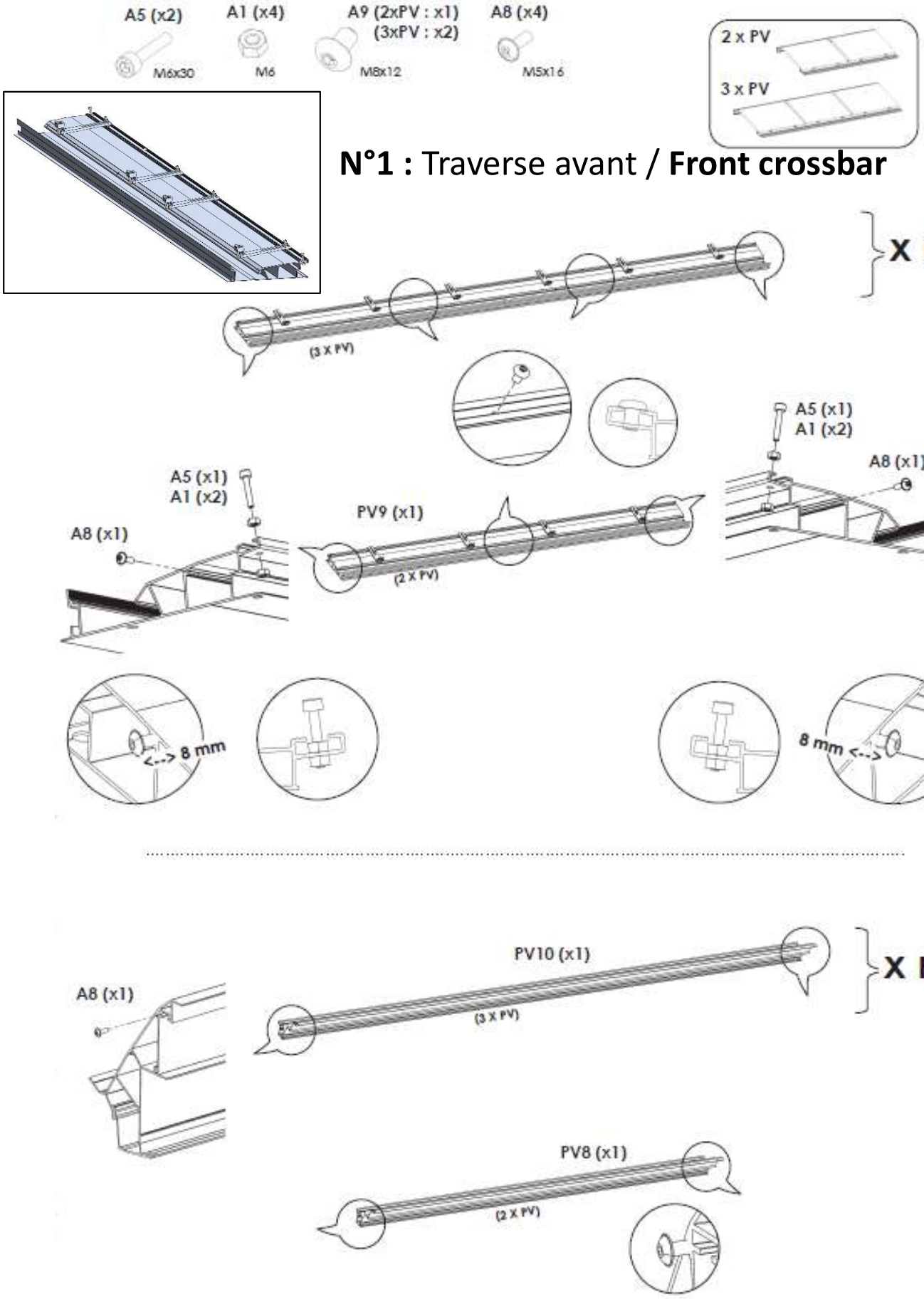

Information and images are non-contactual. We reserve the right to make to make technical changes without notice.

This document is the property of MPS. It shall not be reproduced or shared with third parties without MPS agreement

BIK-E 400 & ROOM-E 400

2. Montage de la toiture / **Mounting the roof**

A. Préparation et assemblage des grandes traverses / **Preparing and assembling large cross-bars**

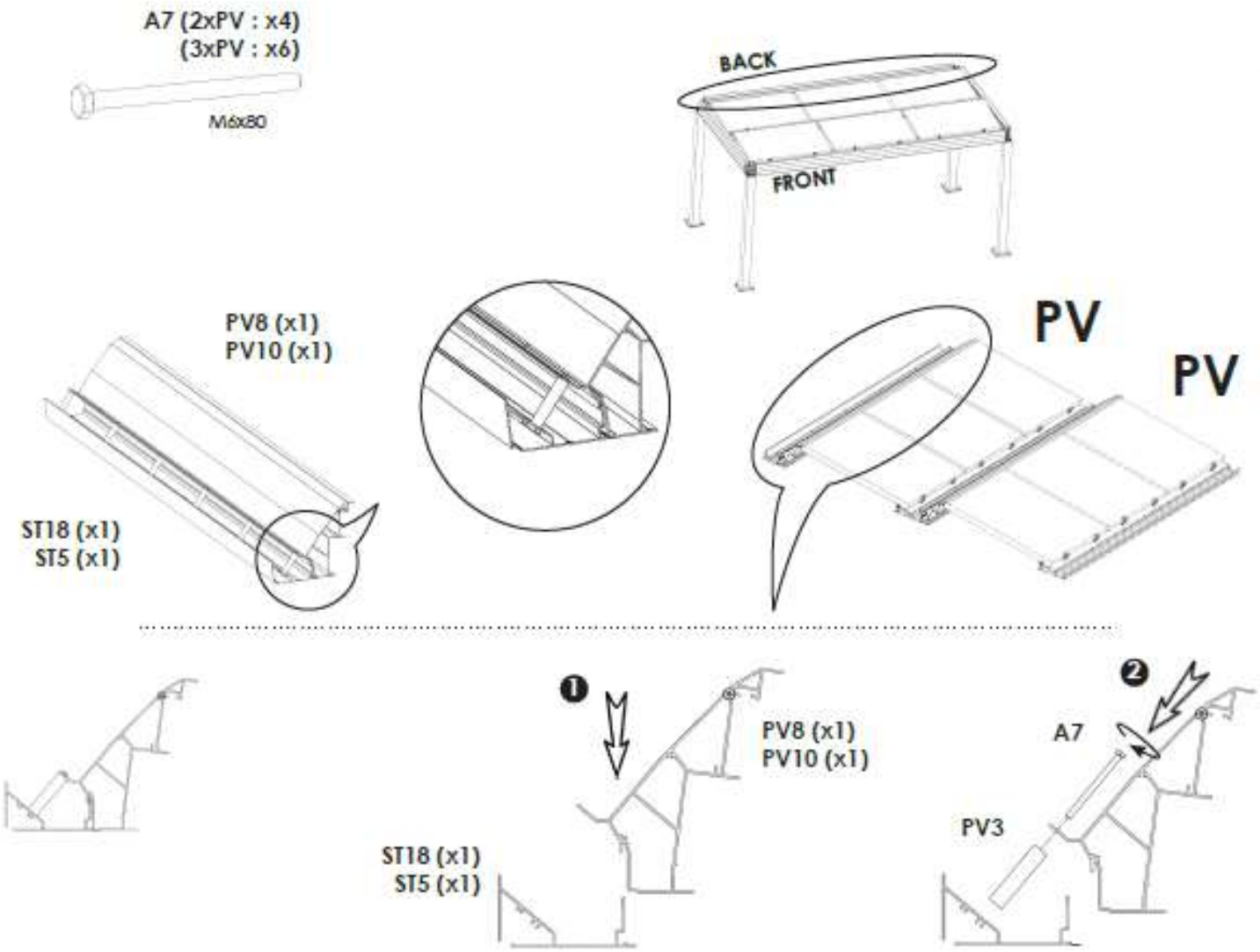

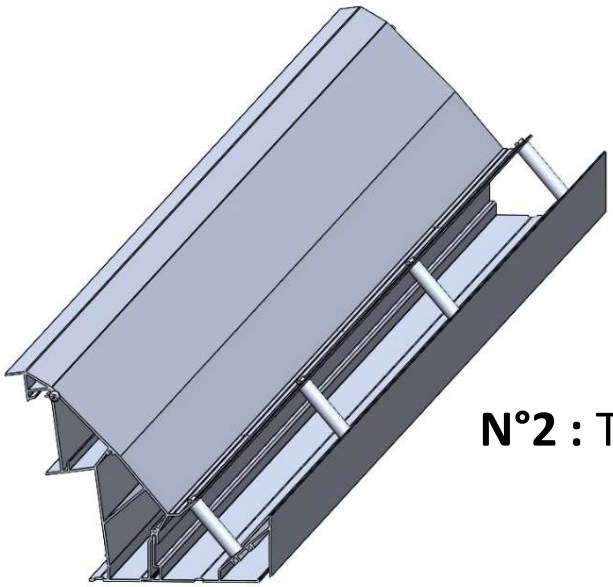

N°2 : Traverse arrière / **Rear crossbar**

Information and images are non-contactual. We reserve the right to make technical changes without notice.

This document is the property of MPS. It shall not be reproduced or shared with third parties without MPS agreement

BIK-E 400 & ROOM-E 400

2. Montage de la toiture / **Mounting the roof**

A. Préparation et assemblage des grandes traverses / **Preparing and assembling large cross-bars**

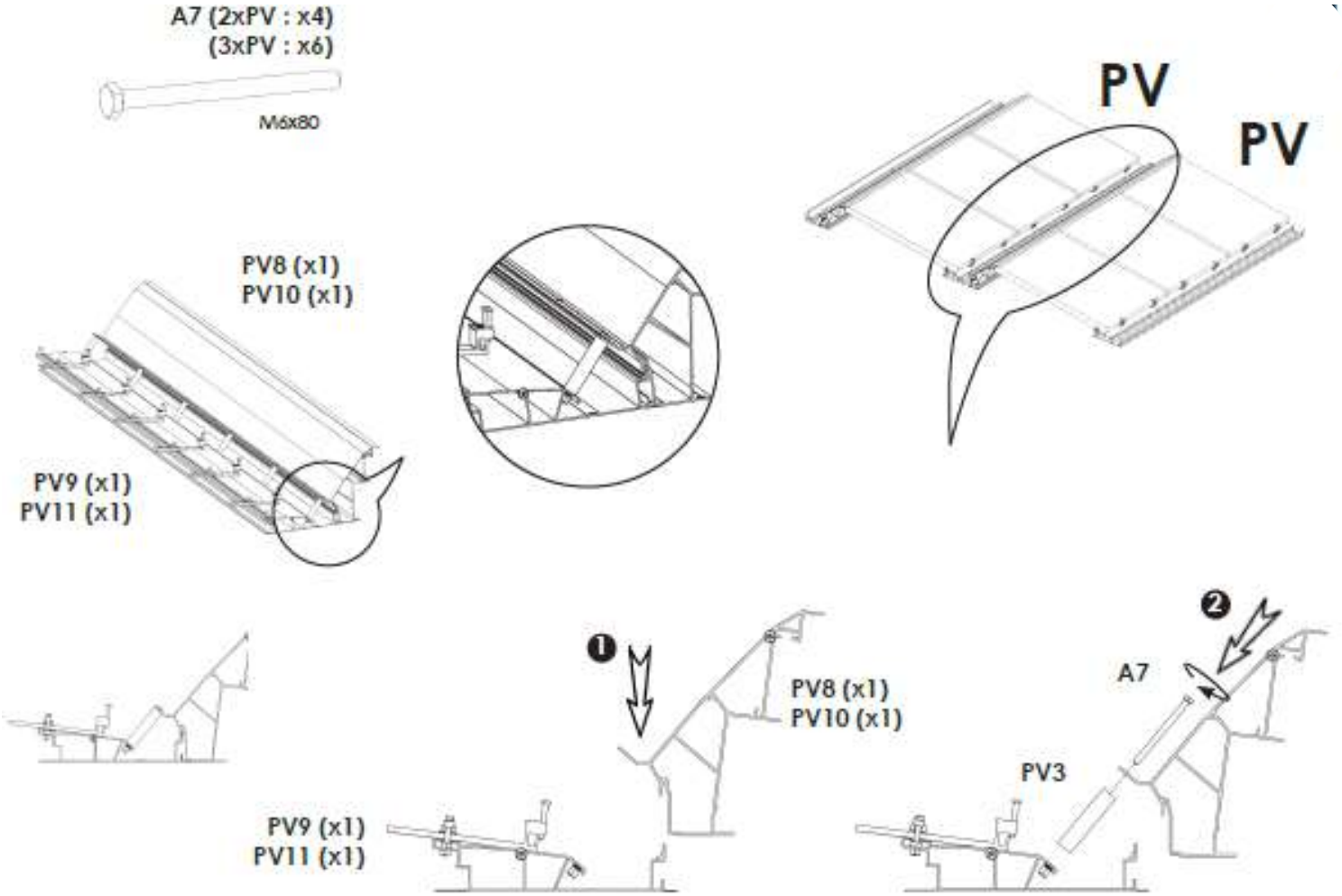

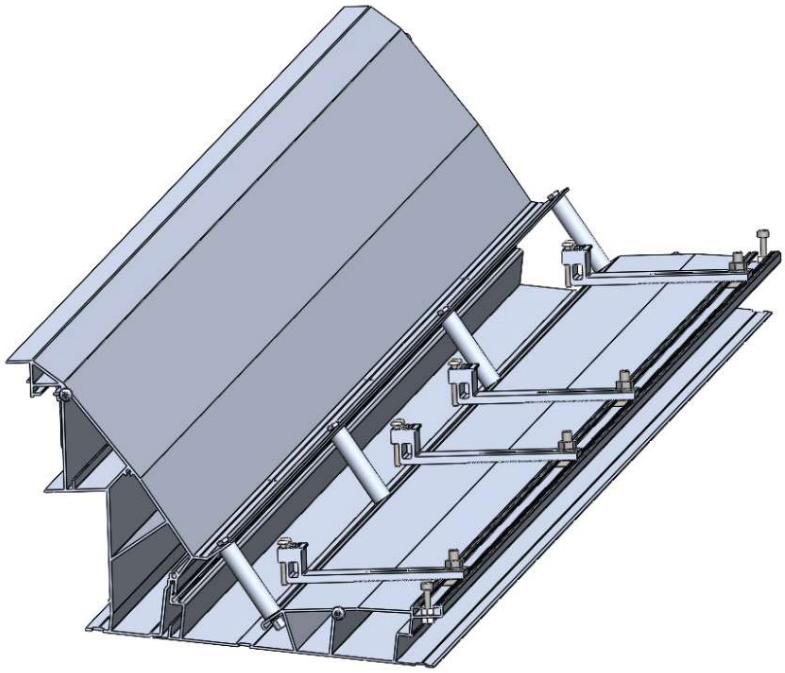

N° 3 : Traverse centrale
Central crossbar

Information and images are non-contactual. We reserve the right to make to make technical changes without notice.

This document is the property of MPS. It shall not be reproduced or shared with third parties without MPS agreement

BIK-E 400 & ROOM-E 400

2. Montage de la toiture / **Mounting of the roof**

A. Préparation et assemblage des grandes traverses
Preparing and assembling large cross-bars

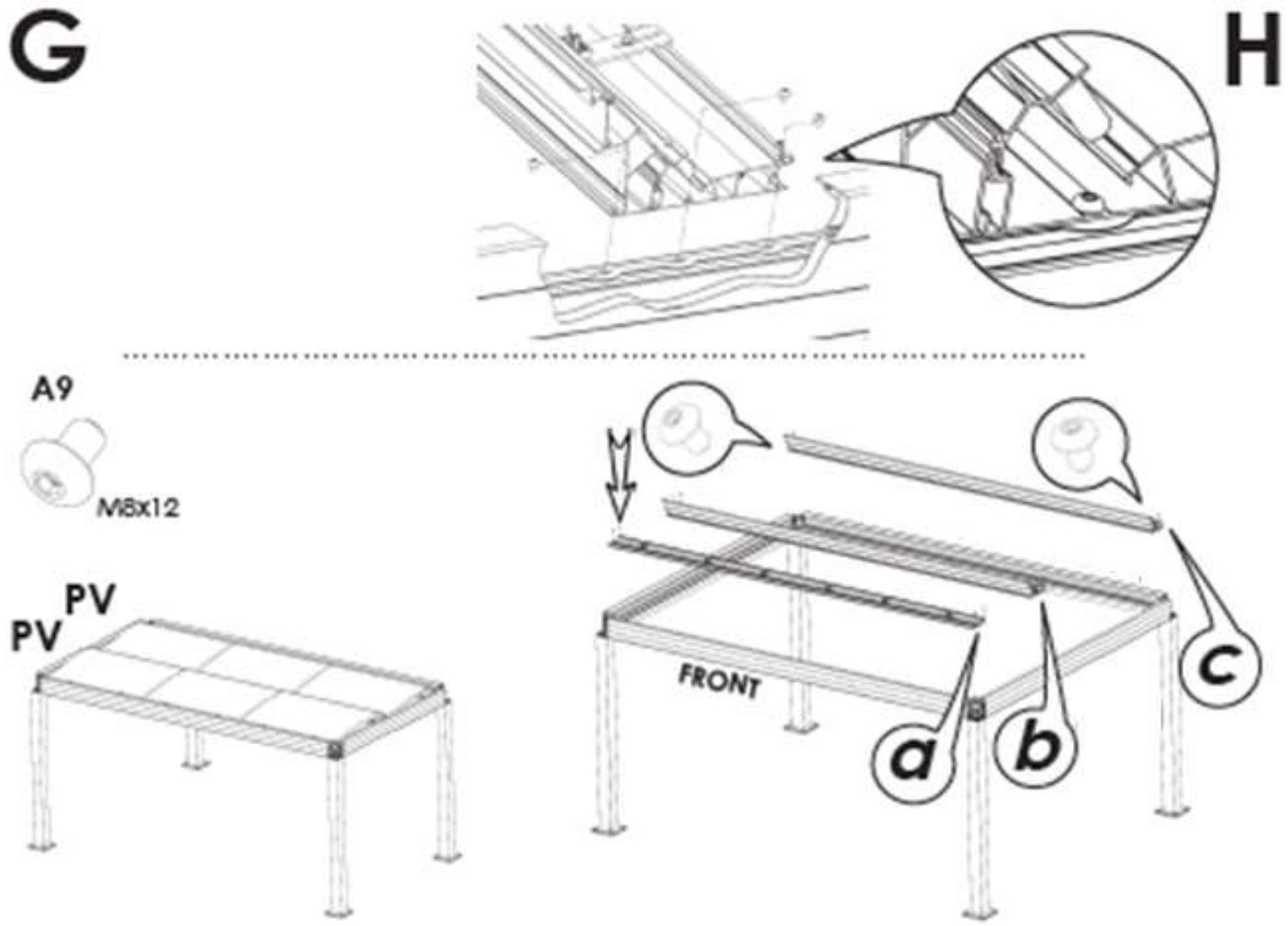

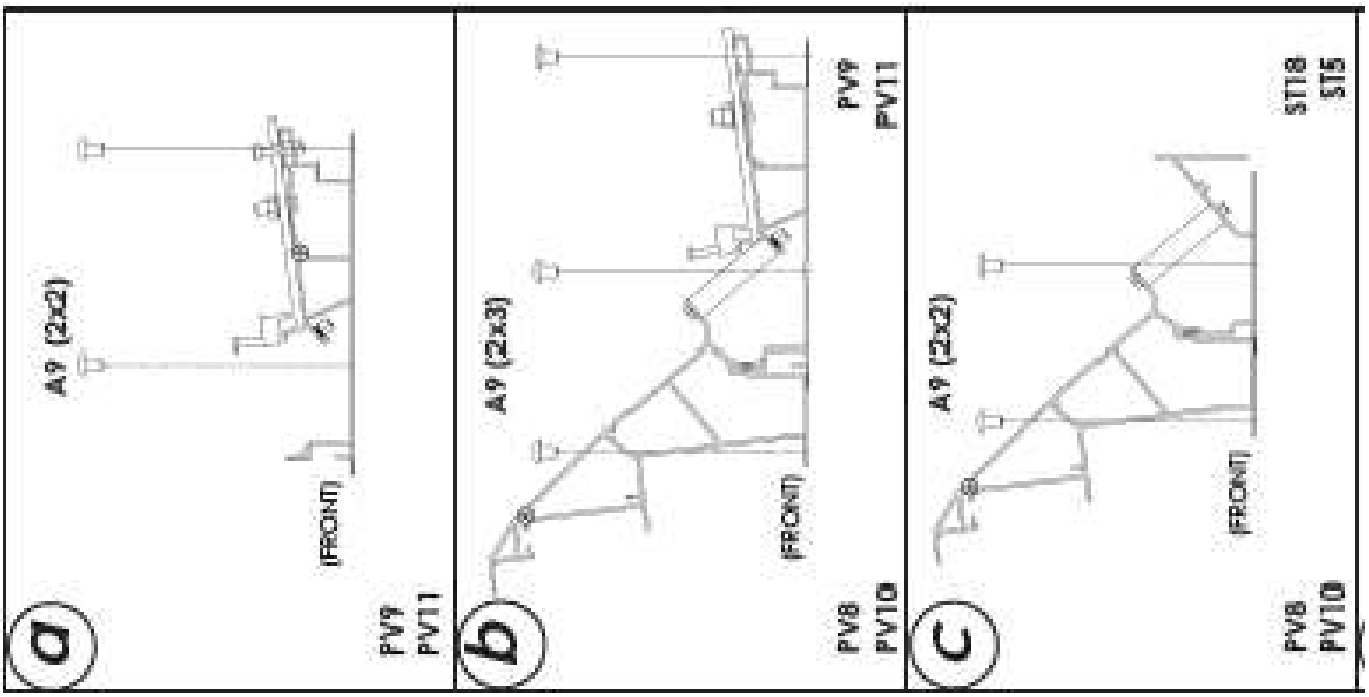

Information and images are non-contactual. We reserve the right to make to make technical changes without notice.

This document is the property of MPS. It shall not be reproduced or shared with third parties without MPS agreement

Seulement pour les Bik-E / Only for Bik-E

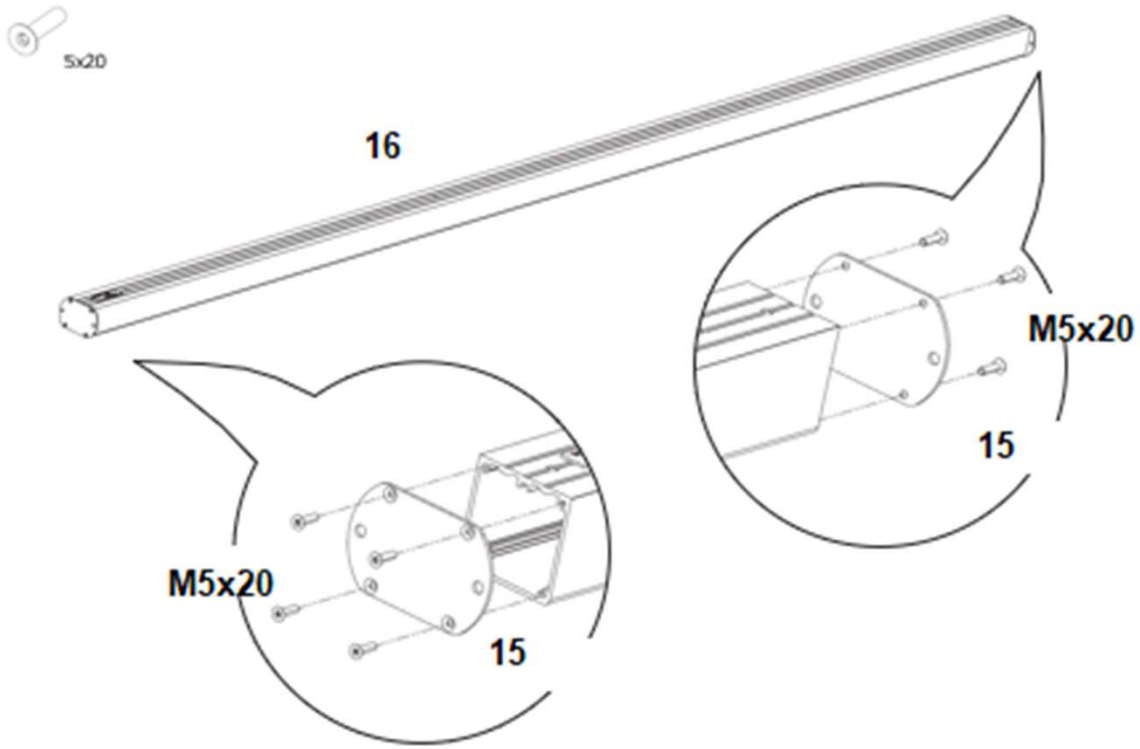

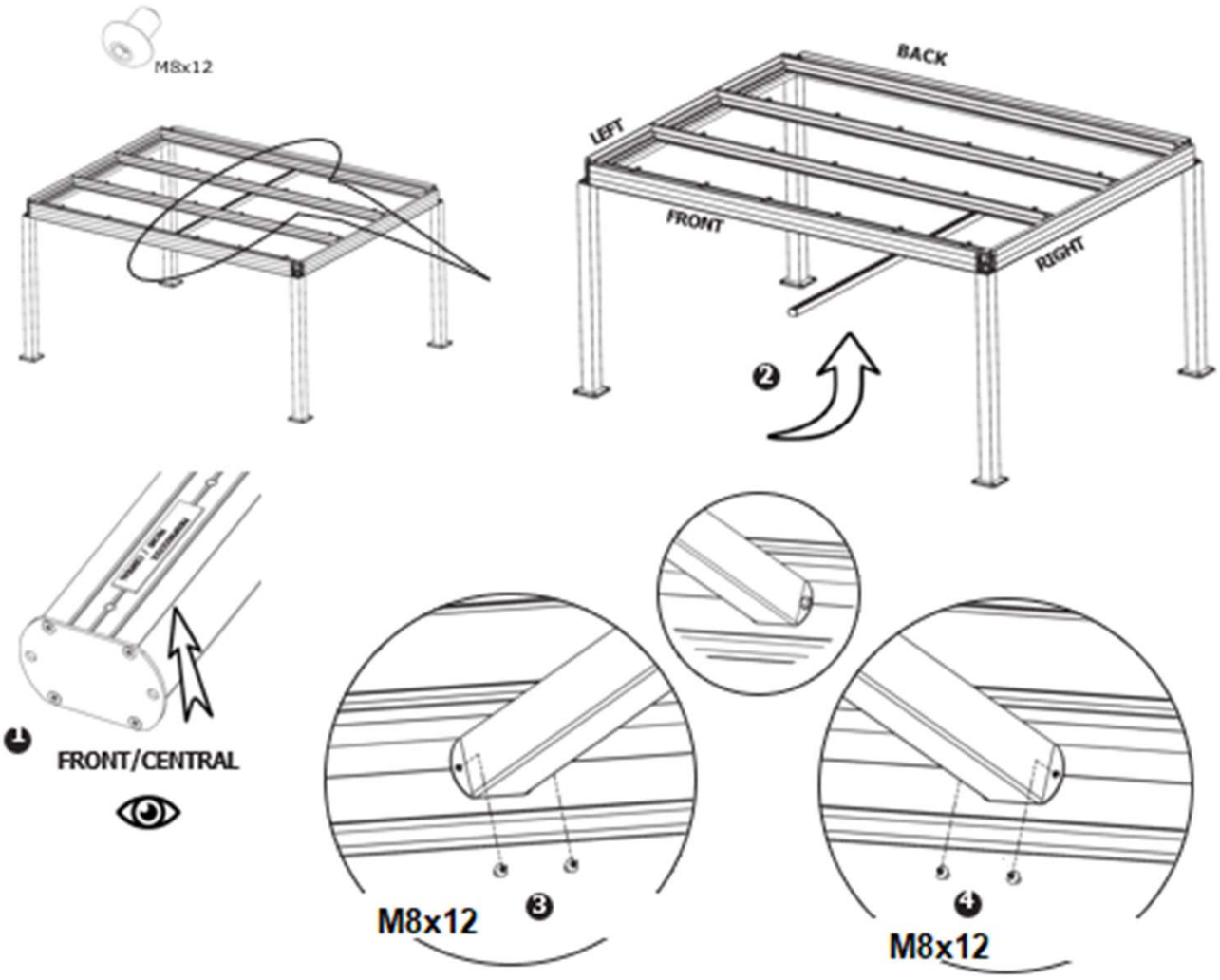

Information and images are non-contactual. We reserve the right to make to make technical changes without notice.

This document is the property of MPS. It shall not be reproduced or shared with third parties without MPS agreement

BIK-E 400 & ROOM-E 400

2. Montage de la toiture / **Mounting of the roof**

A. Préparation et assemblage des grandes traverses
Preparing and assembling large cross-bars

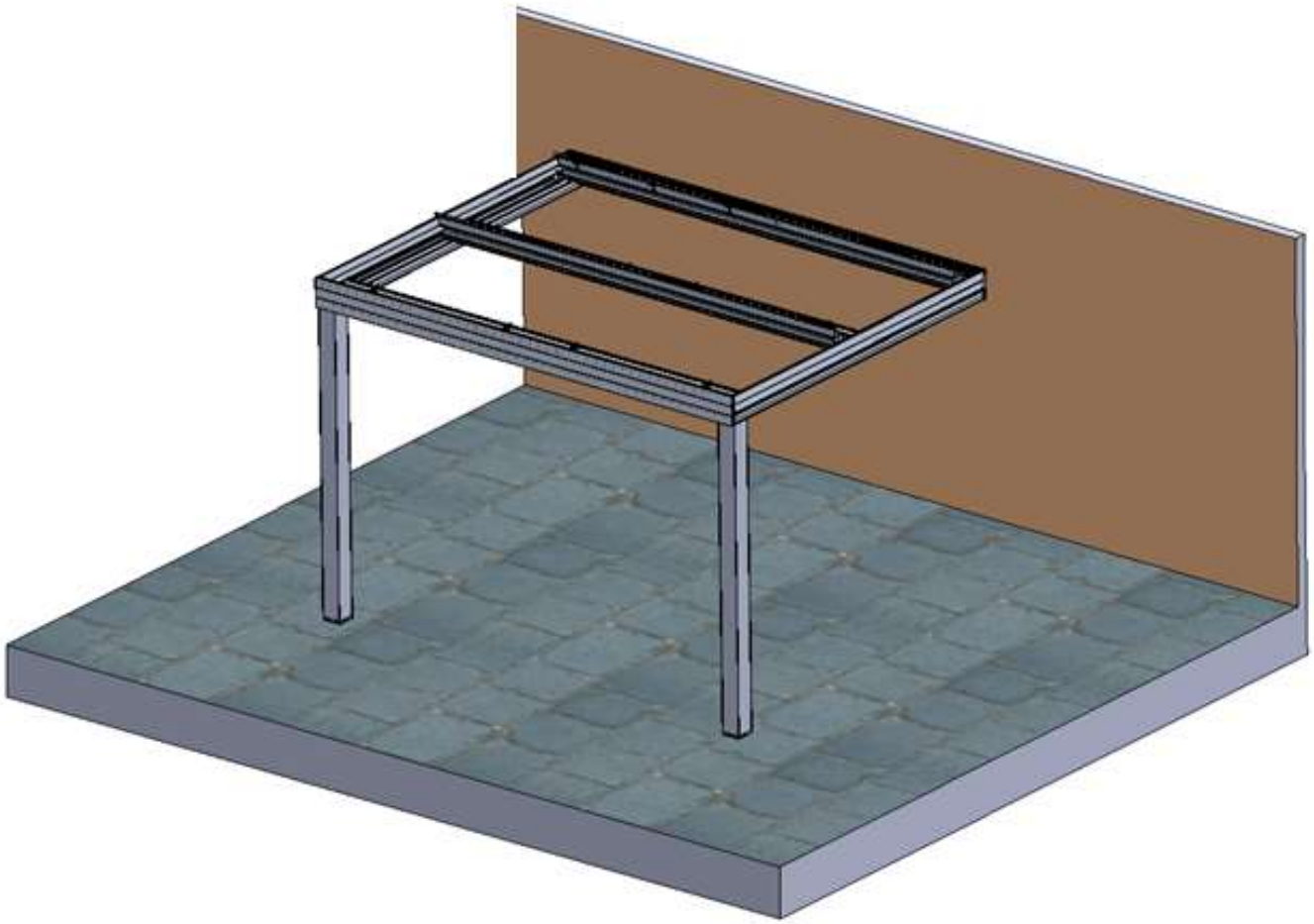

Vous devriez en être à ce résultat
You should be at this point

Information and images are non-contactual. We reserve the right to make to make technical changes without notice.

This document is the property of MPS. It shall not be reproduced or shared with third parties without MPS agreement

BIK-E 400 & ROOM-E 400

2. Montage de la toiture / **Mounting of the roof**

B. Montage des modules photovoltaïques / **Mounting photovoltaic modules**

G

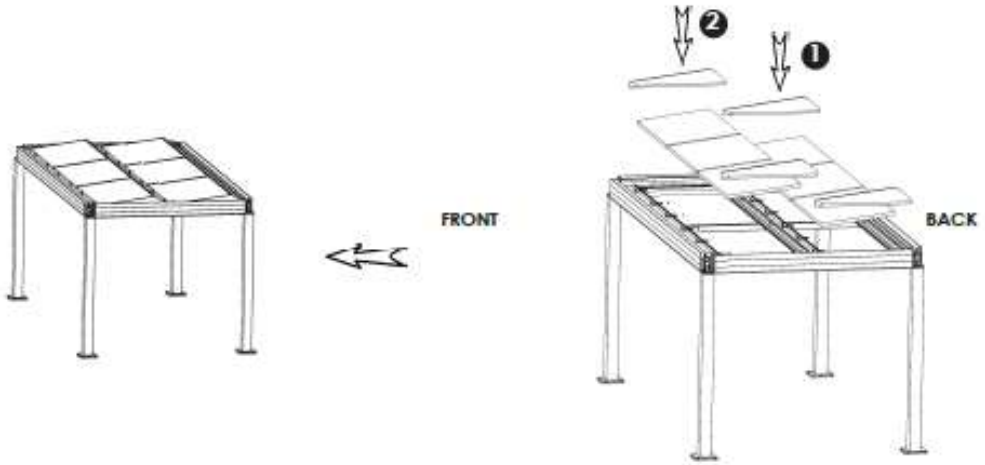

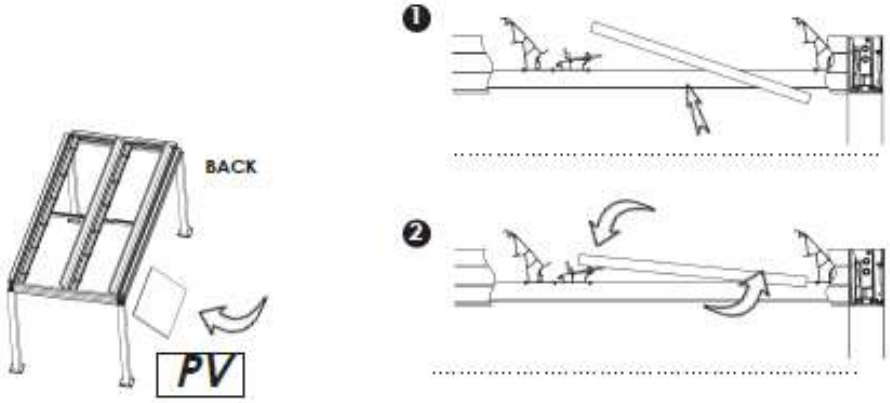

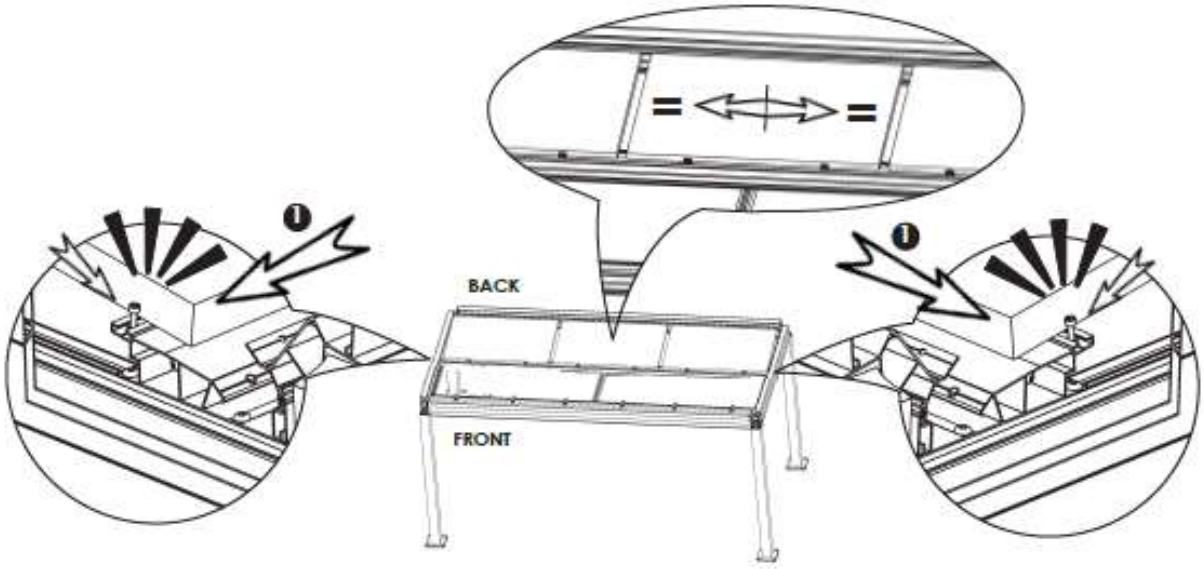

Information and images are non-contactual. We reserve the right to make to make technical changes without notice.

This document is the property of MPS. It shall not be reproduced or shared with th greement

. . . / . . .

BIK-E 400 & ROOM-E 400

2. Montage de la toiture / **Mounting of the roof**

B. Montage des modules photovoltaïques / **Mounting photovoltaic modules**

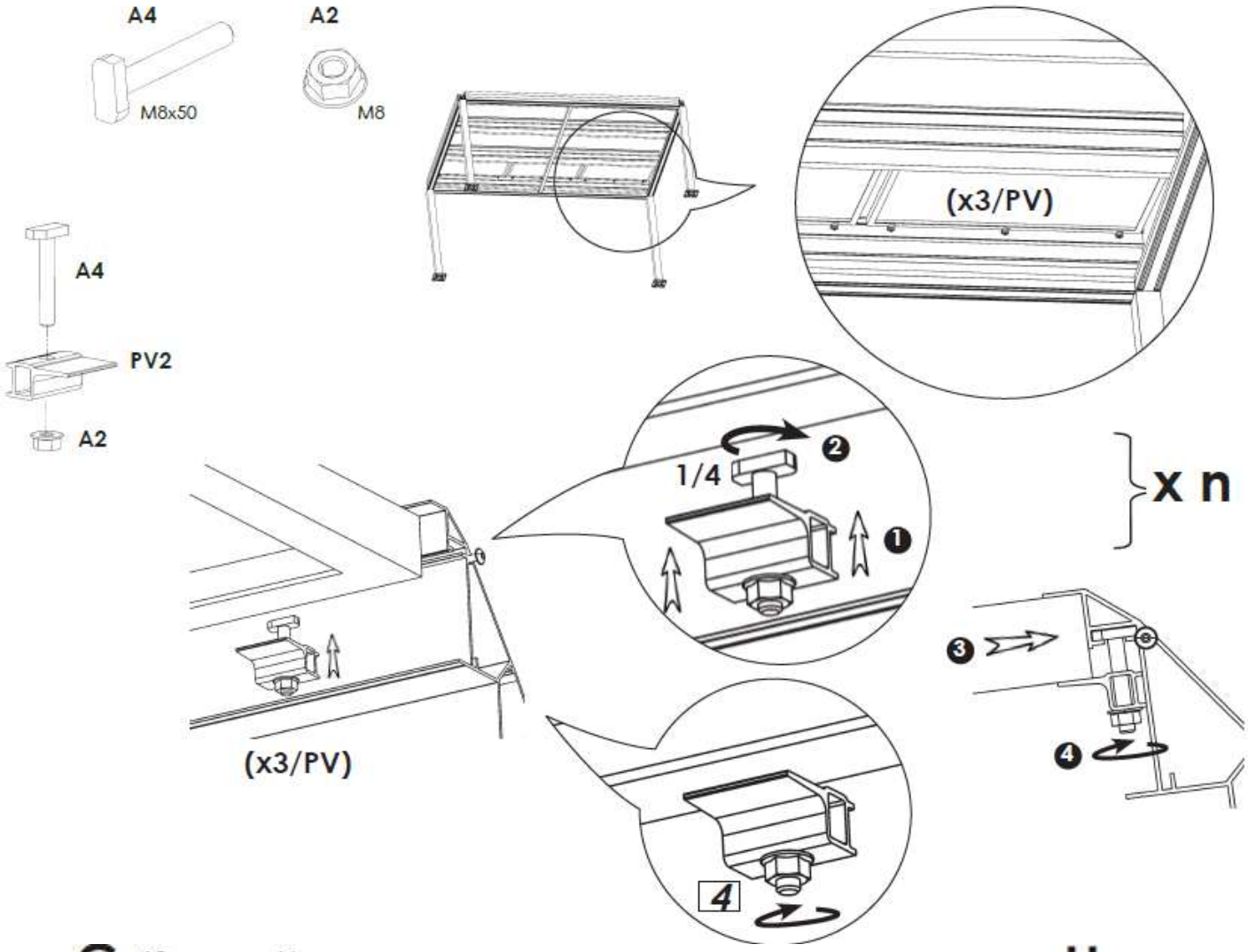

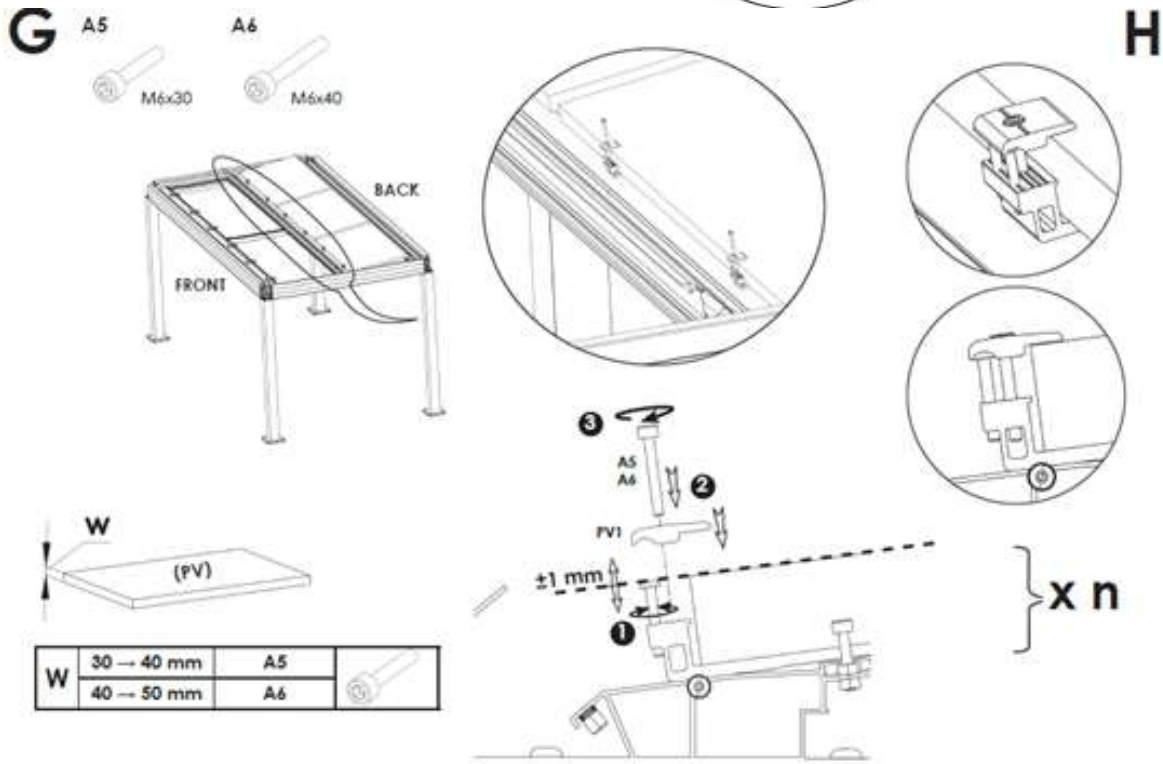

W	30 → 40 mm	A5
	40 → 50 mm	A6

Information and images are non-contactual. We reserve the right to make to make technical changes without notice.

BIK-E 400 & ROOM-E 400

2. Montage de la toiture / **Mounting of the roof**

C. Montage des capots / **Fitting the covers**

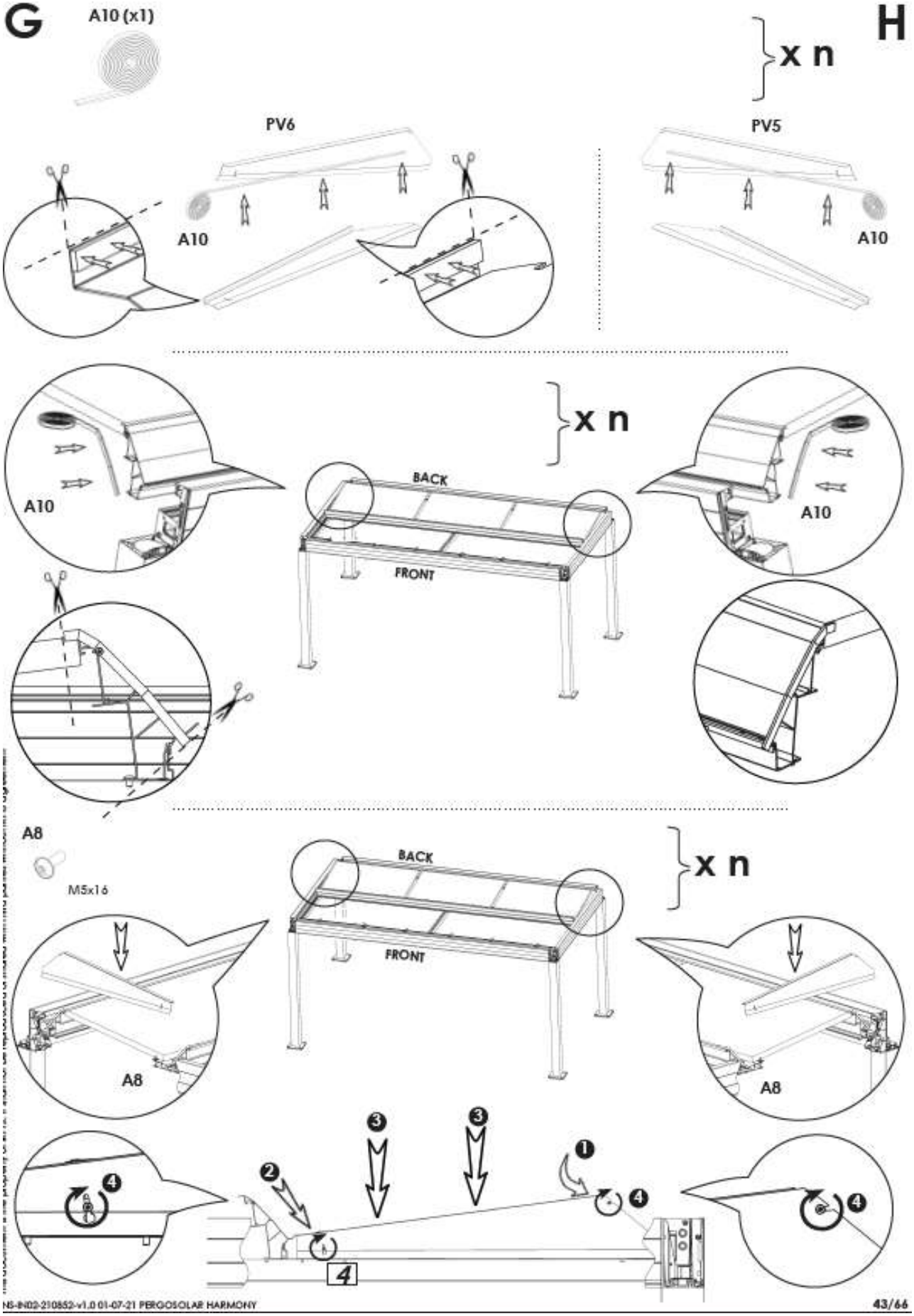

Information and images are non-contactual. We reserve the right to make to make technical changes without notice.

This document is the property of MPS. It shall not be reproduced or shared with third parties without MPS agreement

BIK-E 400 & ROOM-E 400

2. Montage de la toiture / **Mounting of the roof**

C. Montage des capots / **Fitting the covers**

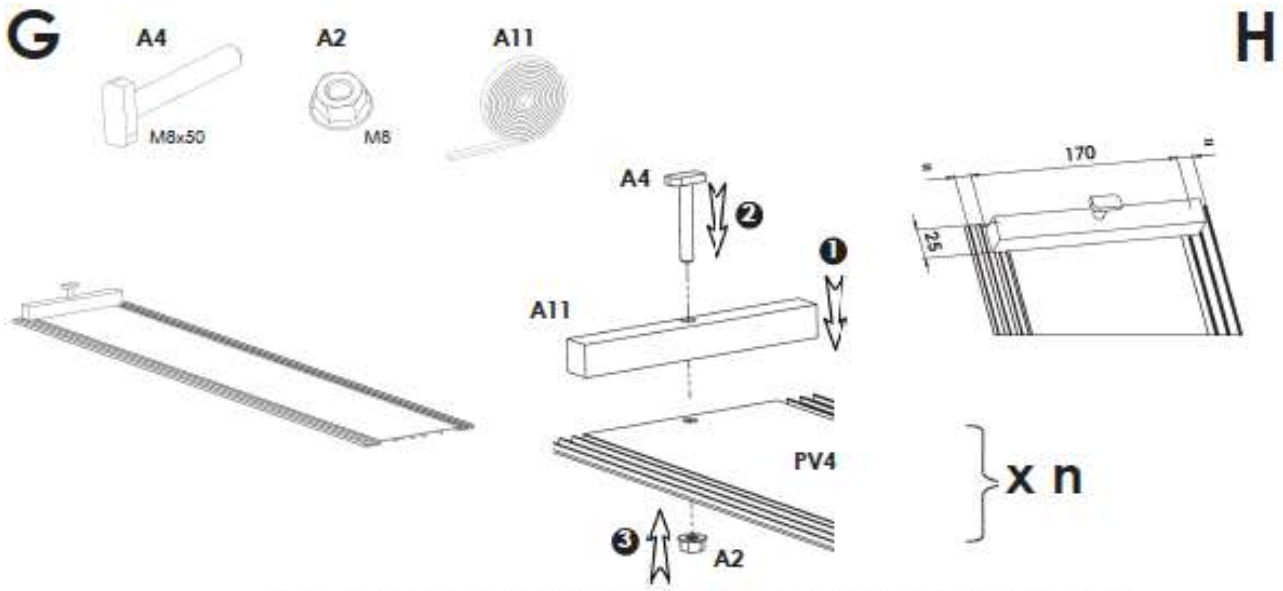

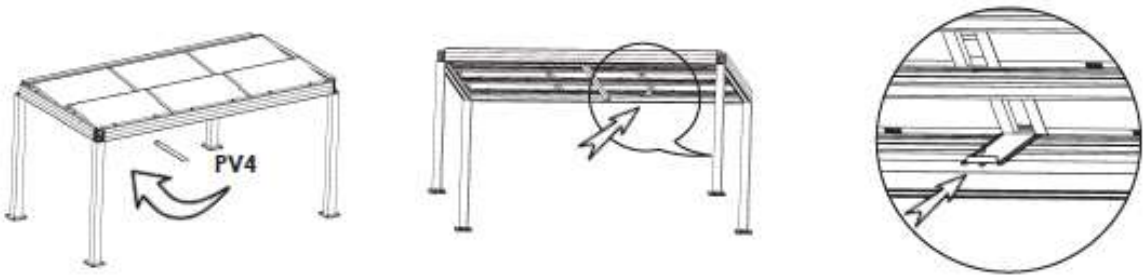

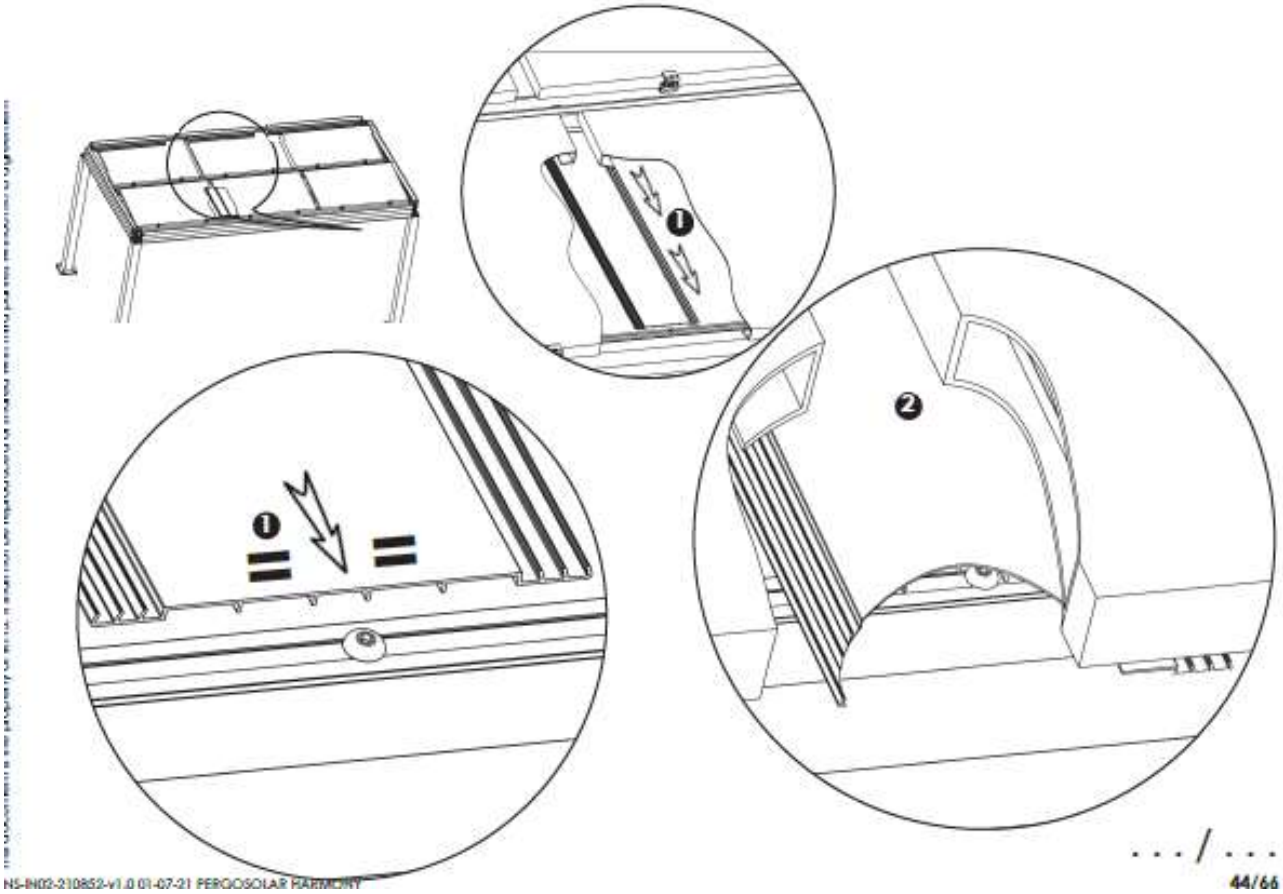

Information and images are non-contactual. We reserve the right to make to make technical changes without notice.

This document is the property of MPS. It shall not be reproduced or shared with third parties without MPS agreement

BIK-E 400 & ROOM-E 400

2. Montage de la toiture / **Mounting of the roof**

C. Montage des capots / **Fitting the covers**

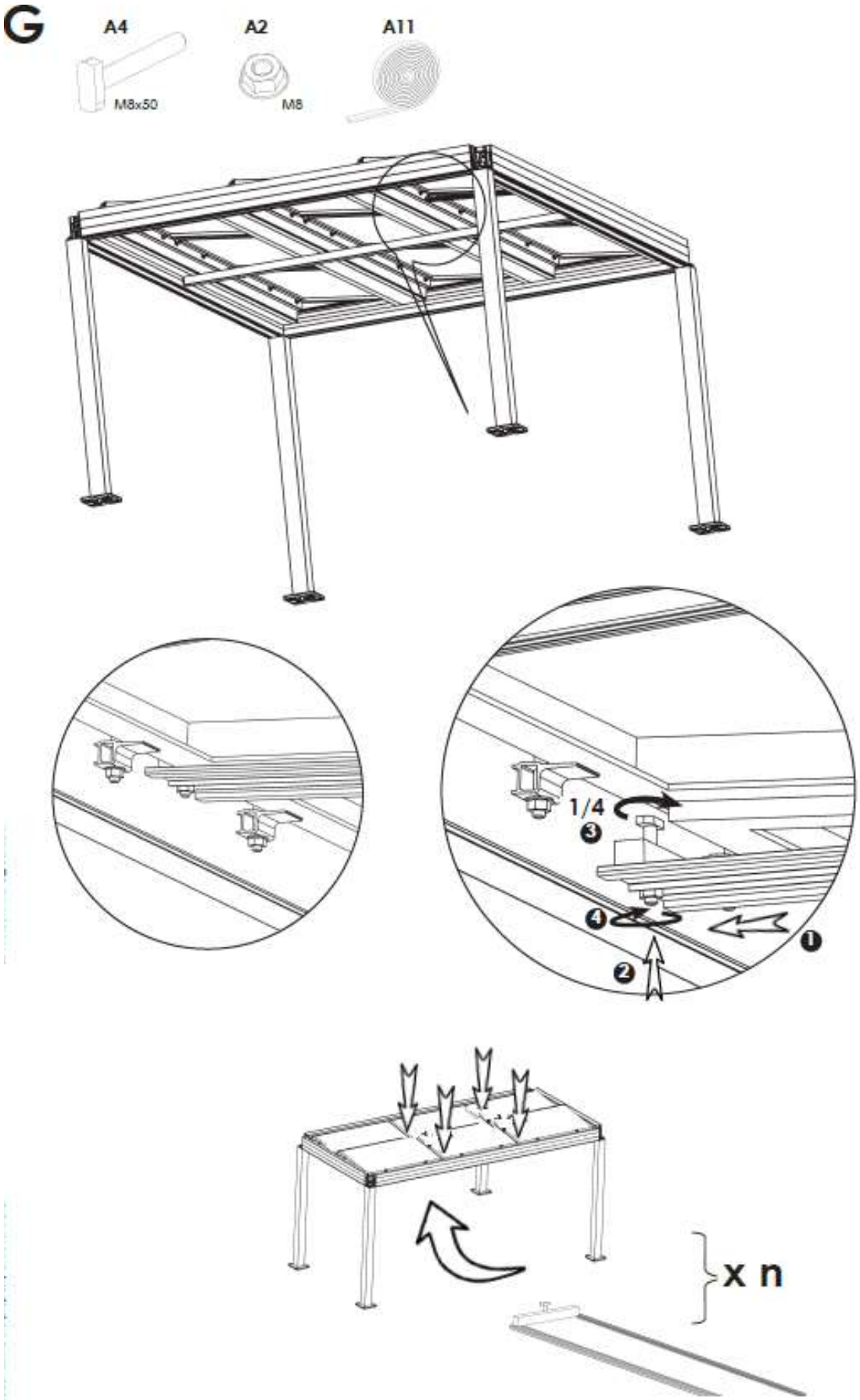

Information and images are non-contactual. We reserve the right to make to make technical changes without notice.

This document is the property of MPS. It shall not be reproduced or shared with third parties without MPS agreement

BIK-E 400 & ROOM-E 400

3. Partie électrique / **Electrical part**

Fixez les micro-onduleurs avec des vis auto-taraudeuses de 6,3 sur le retour de forme

Secure the microinverters with 6.3" self-tapping screws on the return form

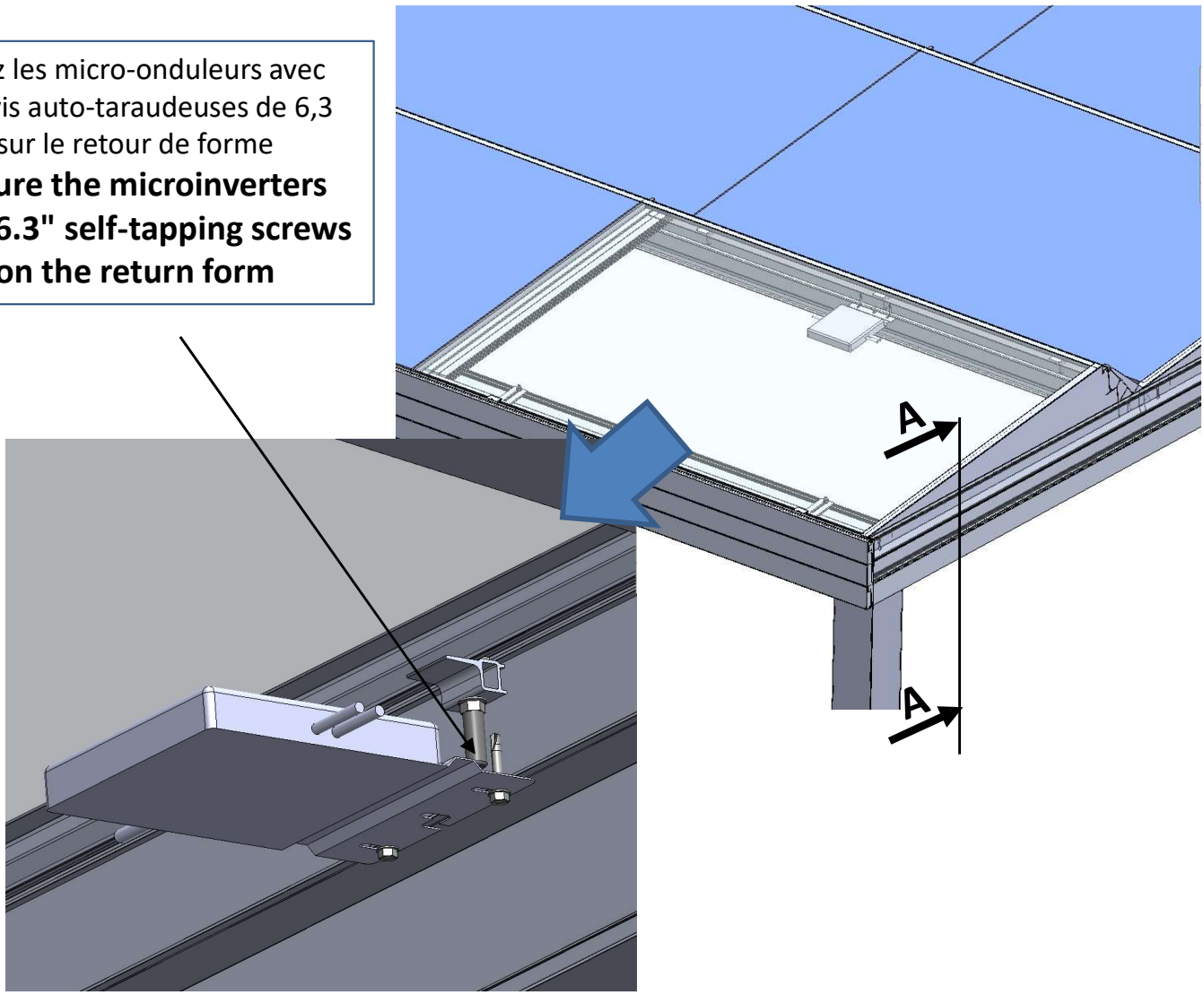

Passage des câbles d'une ligne à l'autre

Passing cables from one line to another

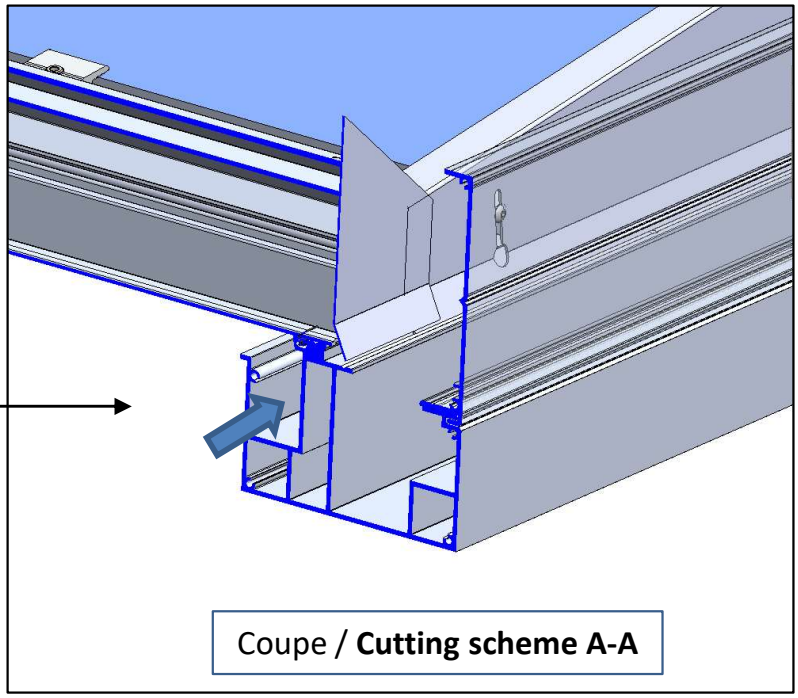

Coupe / **Cutting scheme A-A**

Information and images are non-contactual. We reserve the right to make to make technical changes without notice.

This document is the property of MPS. It shall not be reproduced or shared with third parties without MPS agreement

BIK-E 400 & ROOM-E 400

3. Partie électrique / **Electrical part**

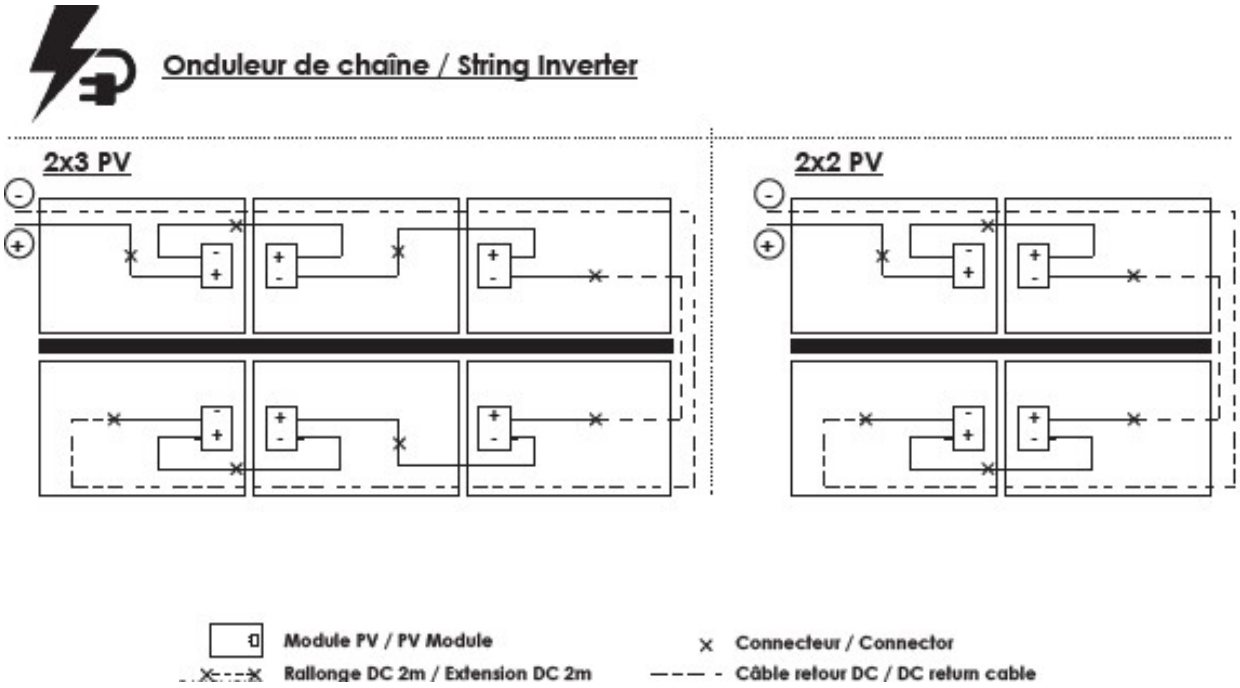

Raccorder la structure en aluminium et tous les cadres des panneaux solaires à la terre, conformément aux normes électriques en vigueur dans le pays
Connect the aluminium structure and all the frames of the solar panels to earth, in accordance with the electrical standards in force in your country.

Information and images are non-contactual. We reserve the right to make technical changes without notice.

This document is the property of MPS. It shall not be reproduced or shared with third parties without MPS agreement

BIK-E 400 & ROOM-E 400

3. Partie électrique / **Electrical part**

Micro-onduleur simple / Single Micro-inverter

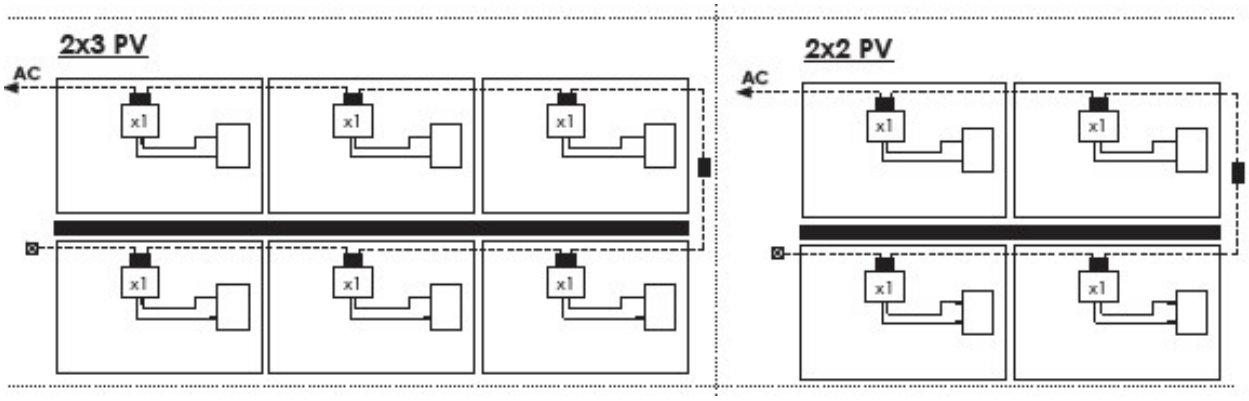

Micro-onduleur multiple / Multiple Micro-inverter

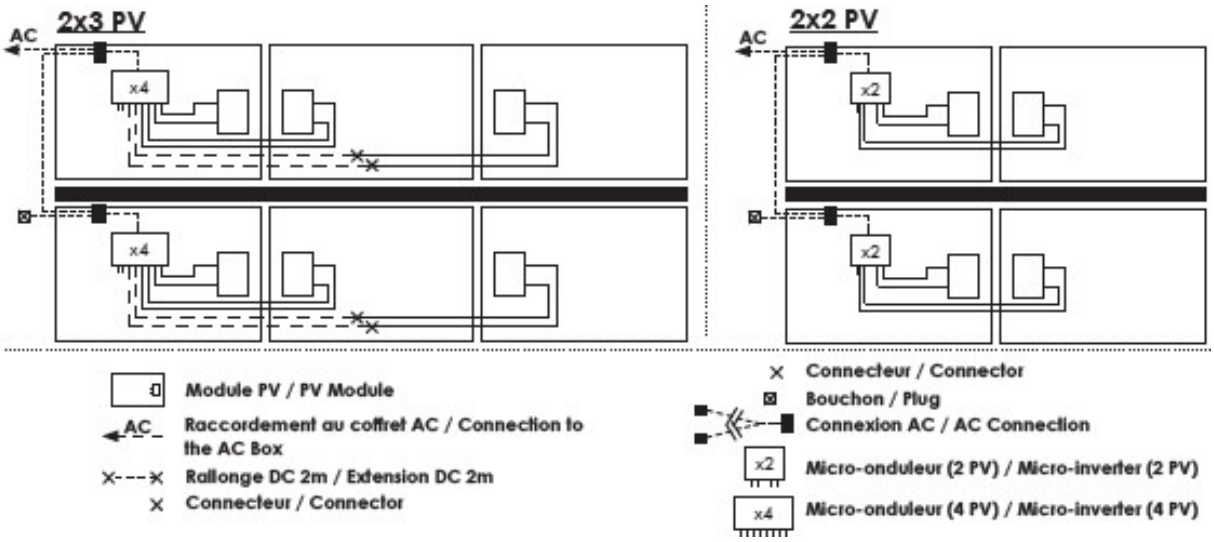

Raccorder la structure en aluminium et tous les cadres des panneaux solaires à la terre, conformément aux normes électriques en vigueur dans le pays
Connect the aluminium structure and all the frames of the solar panels to earth, in accordance with the electrical standards in force in your country.

Information and images are non-contactual. We reserve the right to make technical changes without notice.

This document is the property of MPS. It shall not be reproduced or shared with third parties without MPS agreement

BIK-E 400 & ROOM-E 400

4. Pose des Sous-faces / **Ceiling installation**

ROOM-E 400

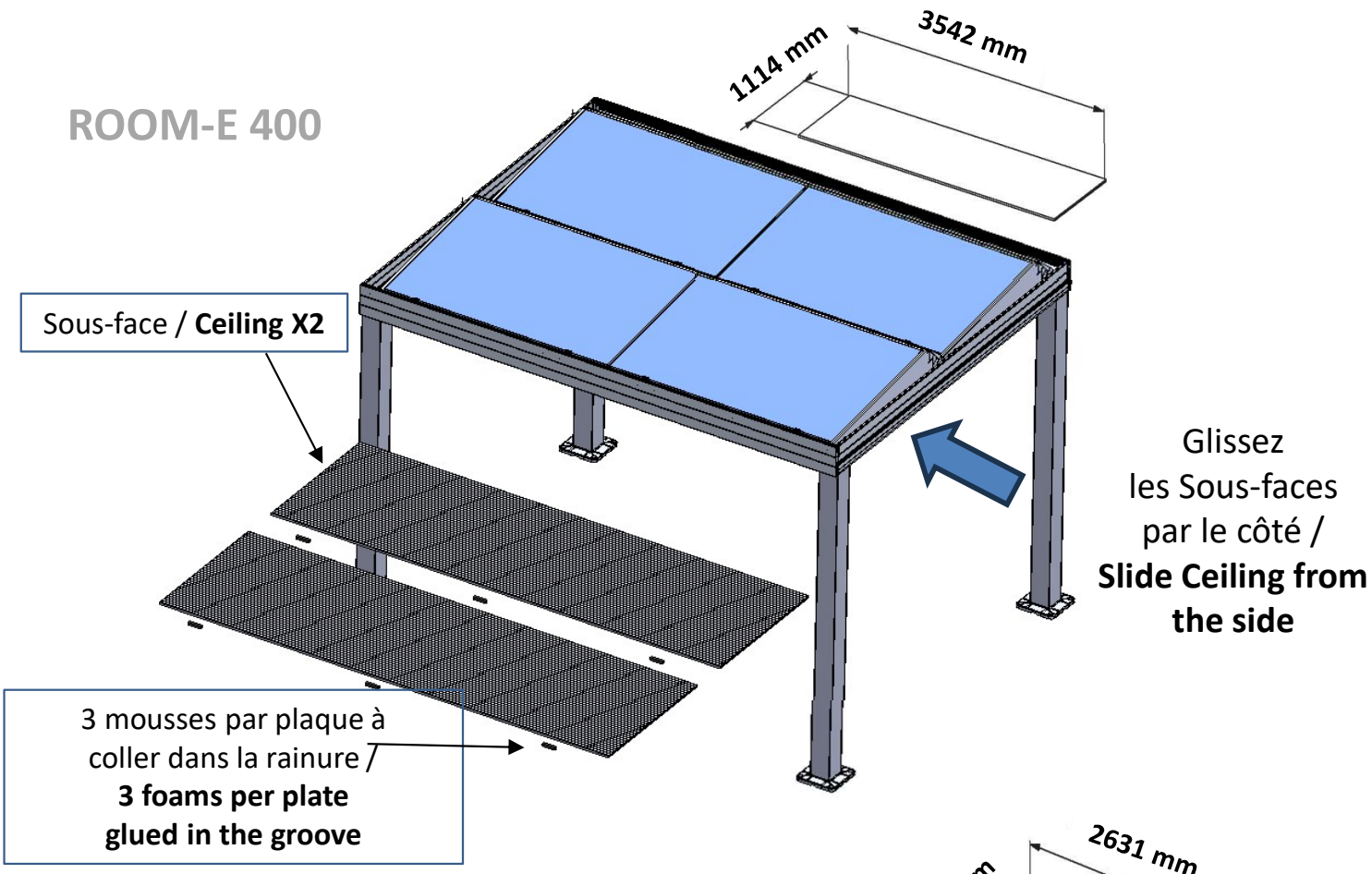

BIK-E 400

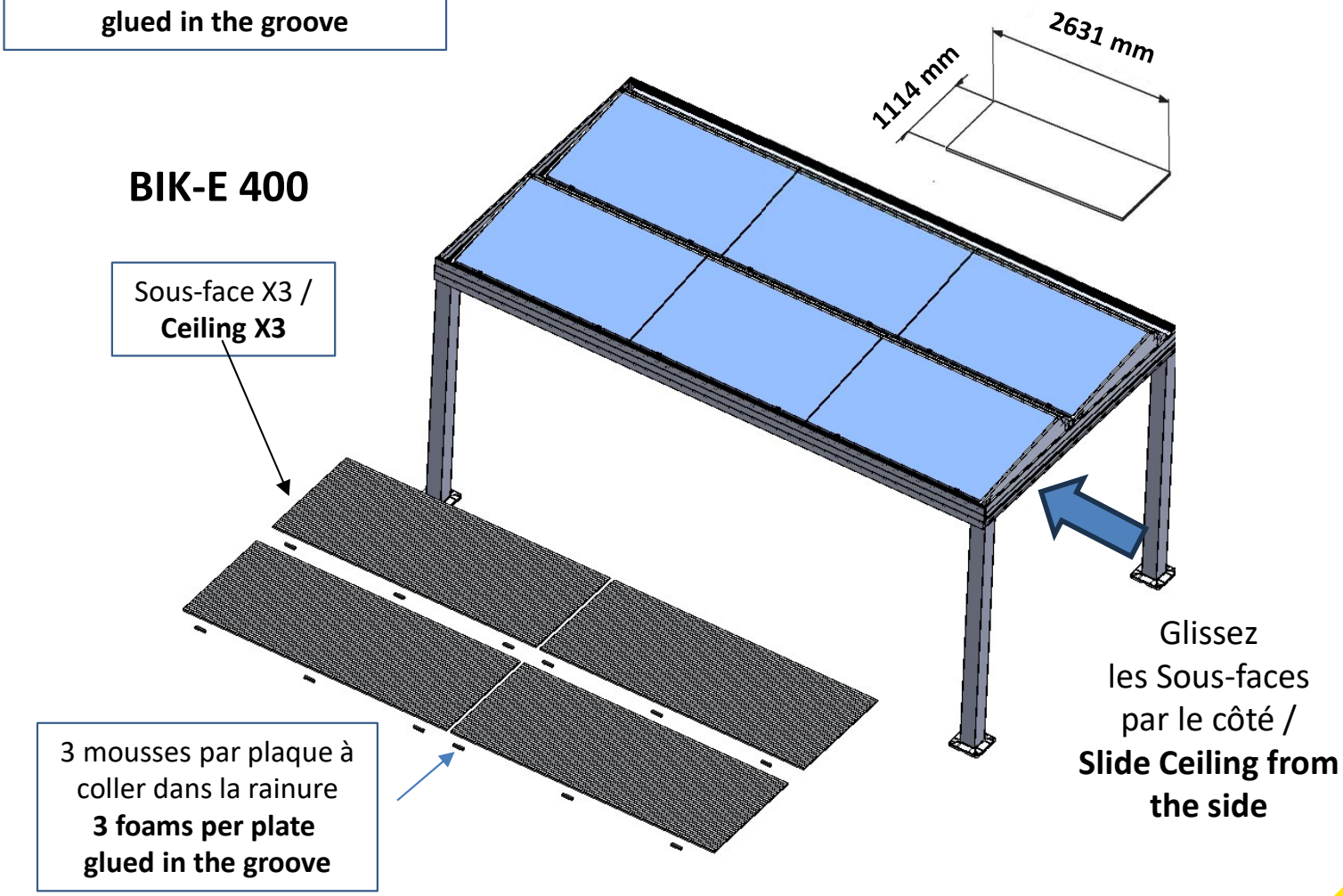

Information and images are non-contactual. We reserve the right to make to make technical changes without notice.

This document is the property of MPS. It shall not be reproduced or shared with third parties without MPS agreement

BIK-E 400 & ROOM-E 400

4. Pose des Sous-faces / **Ceiling installation**

Ø4,8x19

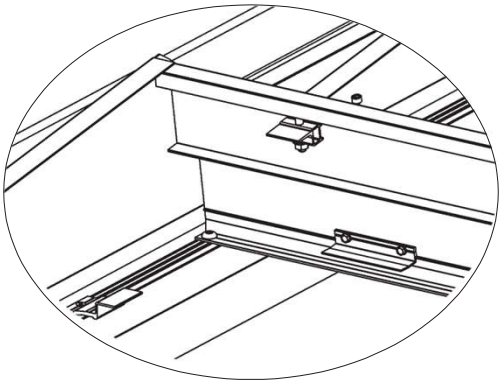

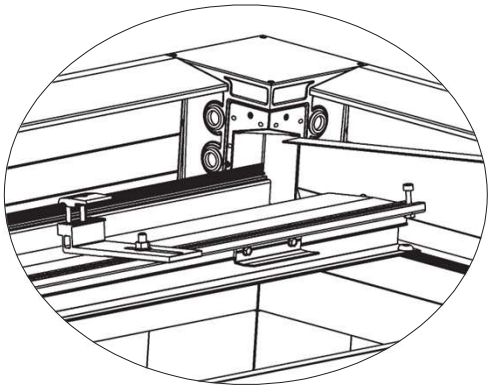

Sous-face / **Ceiling**

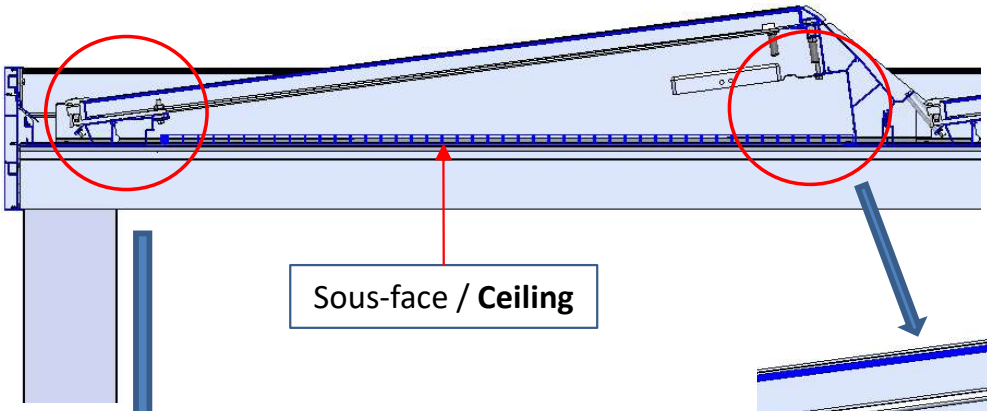

Sous-face / **Ceiling**

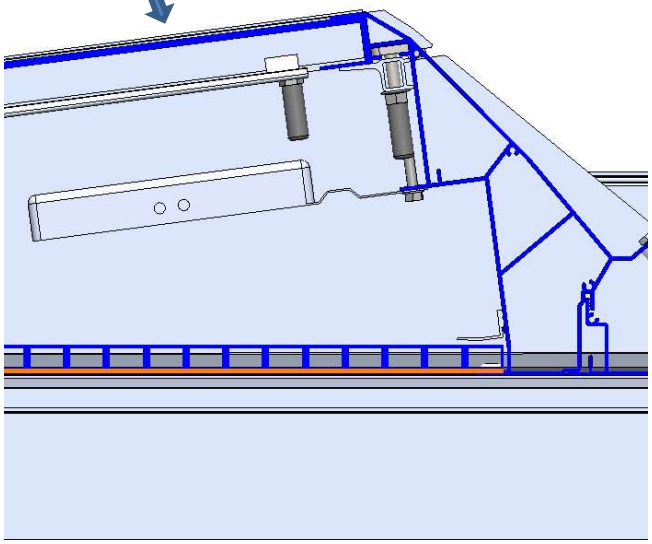

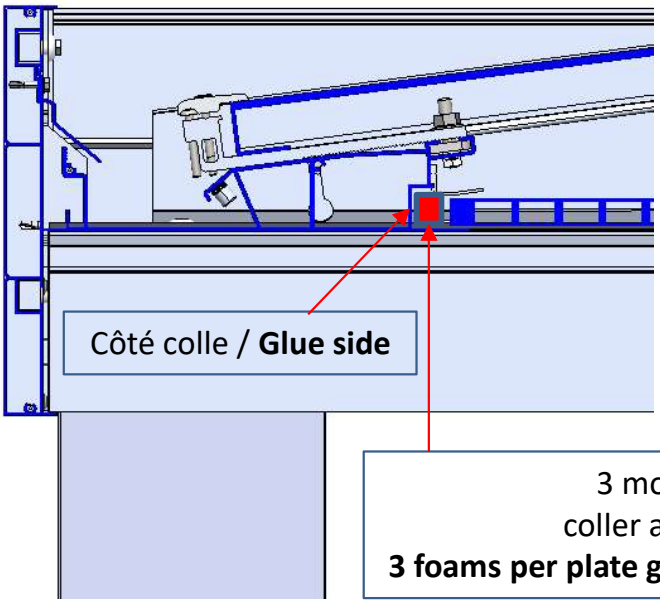

Côté colle / **Glue side**

3 mousses par plaque à
coller au fond de la rainure /
3 foams per plate glued to the bottom of the groove

Information and images are non-contactual. We reserve the right to make technical changes without notice.

This document is the property of MPS. It shall not be reproduced or shared with third parties without MPS agreement

BIK-E 400 & ROOM-E 400

4. Pose des Sous-faces (Sous-faces de marque Bacacier COVEO 3,35 RAL 7016 1000 x 35 x lg 1120)

Laying the Ceilings (Bacacier COVEO 3.35 RAL 7016 Ceilings 1000 x 35 x length 1120)

Attention : hauteur de la tôle = 35 mm impératif (quel que soit le type de tôle).

Warning: sheet height = 35 mm imperative (whatever the type of sheet).

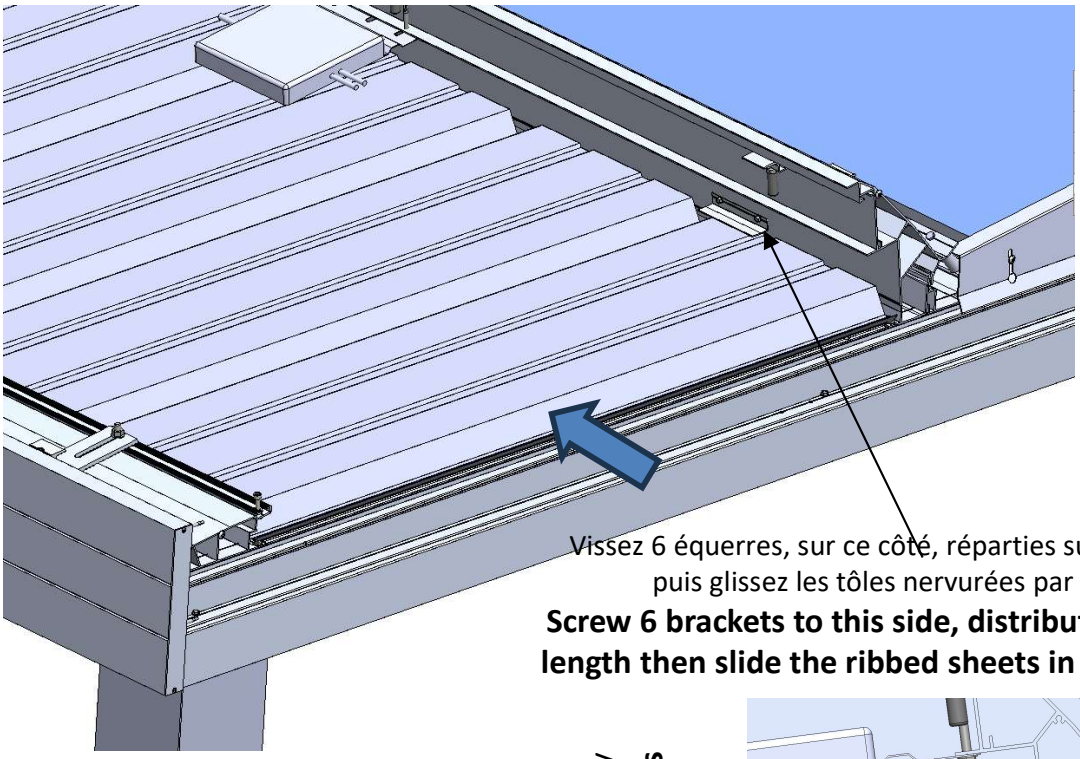

Ø4,8x19

Vissez 6 équerres, sur ce côté, réparties sur la longueur puis glissez les tôles nervurées par le côté

Screw 6 brackets to this side, distributed along the length then slide the ribbed sheets in from the side

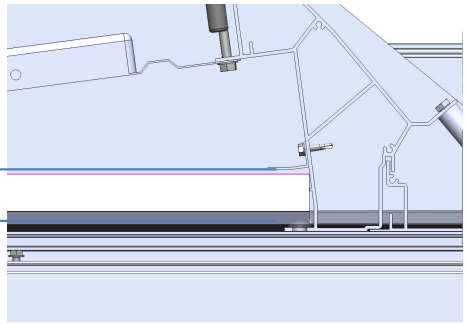

Emboitez les tôles entre elles puis coupez la dernière à la longueur

Fit the sheets together and then cut the last one to length

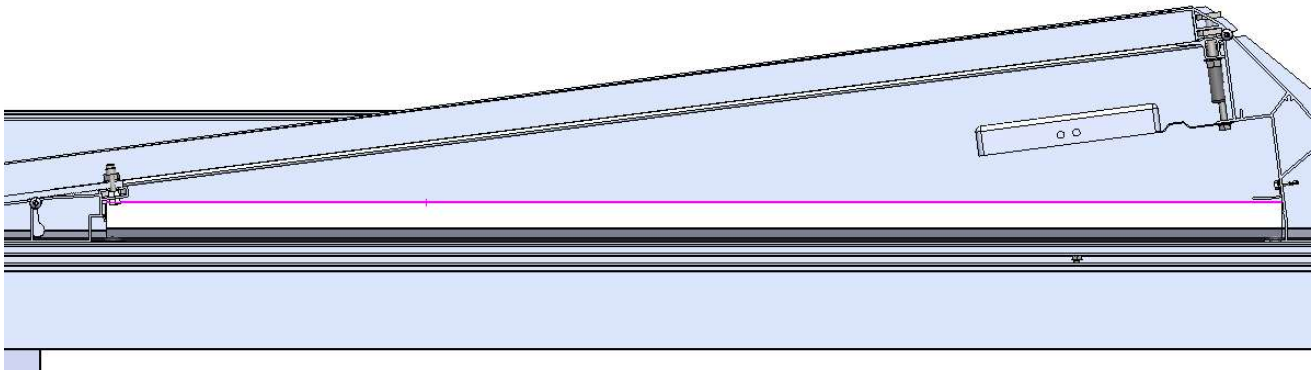

Information and images are non-contactual. We reserve the right to make to make technical changes without notice.

This document is the property of MPS. It shall not be reproduced or shared with third parties without MPS agreement

5. Montage de l'option Renfort Bik-E / **Fitting the Bik-E reinforcement option**

5.1 Préparation du renfort / **Reinforcement preparation**

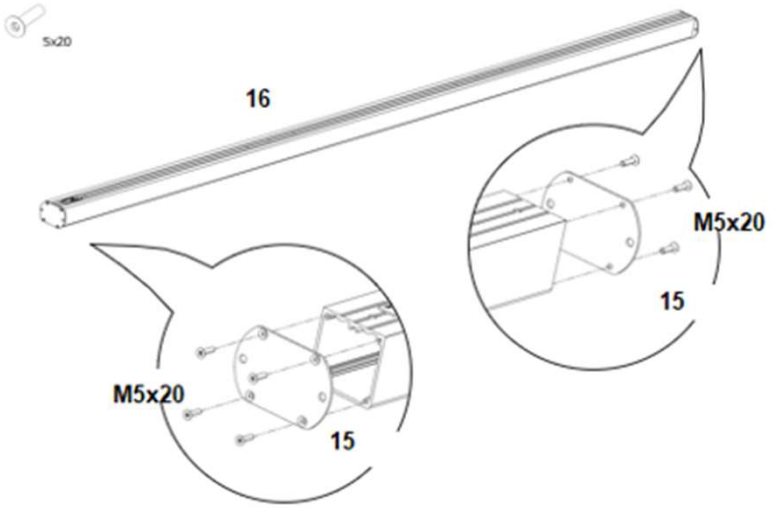

5.2 Fixation du renfort / **Reinforcement fixation**

Percer les pieds entre lequel le renfort sera fixé
- Perçage de diamètre 9mm à la hauteur souhaitée .
- **Attention** : percer OBLIGATOIREMENT au milieu du pied (dans le sens de la largeur)
- Se servir des plaques de fixation comme gabarit pour l'entraxe.

Fixation :
- **Attention** : mettre une plaque de fixation de chaque côté du pied
- Utiliser les vis M8x150 et les écrous auto-cassant

Drill the feet between which the reinforcement will be fixed
- **Drill 9mm diameter holes at the desired height.**
- **Caution: MUST be drilled in the middle of the leg (widthwise).**
- **Use the mounting plates as a template for the center-to-center distance.**

Mounting :
- **Caution: place a mounting plate on each side of the leg**
- **Use M8x150 screws and self-locking nuts**

Information and images are non-contactual. We reserve the right to make to make technical changes without notice.

This document is the property of MPS. It shall not be reproduced or shared with third parties without MPS agreement